To Order Contact: Exact Tooling / www.exacttooling.com / sales@exacttooling.com / 888-988-8820

SOWA®

METALWORKING SOLUTIONS

SKODA LIVE CENTERS

SKODA

SKODA LIVE CENTERS

Skoda & Sowa Heavy Duty Live Centers - CSN 243324

Features

- The rotating spindle is extended right through the tapered shank
- Two specially designed adjustable needle-roller bearings carry all radial loads
- A heavy duty ball thrust bearing takes all axial thrust
- Complete protection of bearings form the ingress of coolant, dirt or swarf is provided by the built-in oil-seal, which also prevents loss of lubricant

Morse Taper	Centre Point Angle	Body Dia. (in)	Body Dia. (in)	Body Length (in)	Maximum Weight of Work Piece	SKODA Code No.	Price $	STM Code No.	Price $
1	60°	5/8	1-3/8	4-3/8	200 lb	310-105	102.60	320-105	58.00
2	60°	7/8	1-1/2	5	600 lb	310-110	153.00	320-110	102.70
3	60°	1-1/8	1-7/8	6-1/4	900 lb	310-115	191.30	320-115	119.00
4	60°	1-1/2	2-3/16	7-1/2	1800 lb	310-120	242.50	320-120	134.70
5	60°	1-3/4	2-3/4	9-1/2	3000 lb	310-125	335.90	320-125	173.90
6	60°	2-3/8	3-1/2	12-3/4	7500 lb	310-130	582.20	320-130	339.60

PARTS FOR HEAVY DUTY LIVE CENTERS

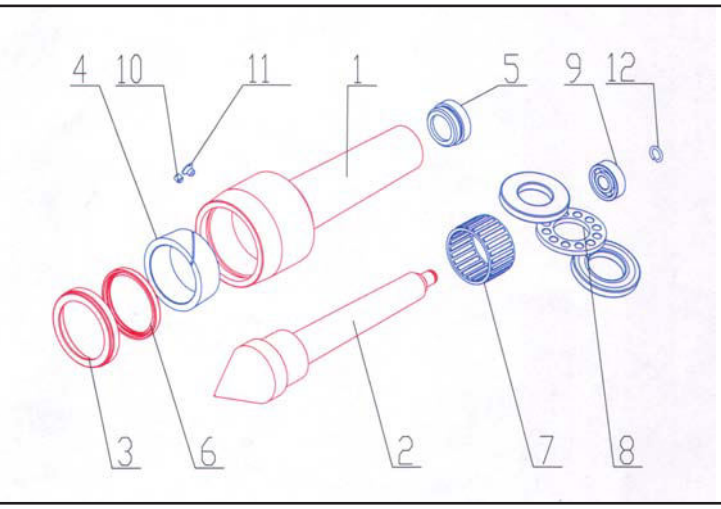

Skoda Model #CSN243324M has new design for part #'s 2,3 & 6 (red)

All remaining parts are used in both models

Parts For Heavy Duty Live Centres

Morse Taper	2-Point Code No.	2-Point Price $	2-Point M Model Code No.	2-Point M Model Price $	3-Ring Code No.	3-Ring Price $	3-Ring M Model Code No.	3-Ring M Model Price $	4-Sleeve Code No.	4-Sleeve Price $	5-End Plug Code No.	5-End Plug Price $	6-Seal Code No.	6-Seal Price $	6-Seal M Model Code No.	6-Seal M Model Price $
2	310-205	78.20	310-205M	80.70	310-210	9.80	310-210M	10.65	310-215	51.10	310-220	6.60	310-225	8.10	310-225M	14.50
3	310-305	81.50	310-305M	83.50	310-310	17.40	310-310M	18.10	310-315	59.80	310-320	8.70	310-325	8.10	310-325M	17.90
4	310-405	107.60	310-405M	109.40	310-410	20.70	310-410M	22.30	310-415	63.00	310-420	8.70	310-425	10.50	310-425M	26.90
5	310-505	158.60	310-505M	163.40	310-510	22.90	310-510M	25.40	310-515	88.00	310-520	9.80	310-525	9.30	310-525M	23.70
6	310-605	296.50	310-605M	302.80	310-610	72.80	310-610M	73.60	310-615	116.20	310-620	21.80	310-625	9.30	310-625M	28.00

Morse Taper	7-Roller Bearing Code No.	7-Roller Bearing Price $	8-Thrust Bearing Code No.	8-Thrust Bearing Price $	9-Ball Bearing Code No.	9-Ball Bearing Price $	10-Set Screw Code No.	10-Set Screw Price $	11-Slot Screw Code No.	11-Slot Screw Price $	12-Ring Code No.	12-Ring Price $
2	310-230	33.70	310-235	33.70	310-240	20.70	310-245	1.10	310-250	0.90	310-255	0.70
3	310-330	51.10	310-335	39.10	310-340	21.80	310-345	0.90	310-350	1.10	310-355	0.90
4	310-430	57.60	310-435	44.60	310-440	22.90	310-445	0.90	310-450	1.10	310-455	1.40
5	310-530	69.50	310-535	55.40	310-540	27.20	310-545	0.90	310-550	1.10	310-555	1.40
6	310-630	121.70	310-635	89.10	310-640	32.60	310-645	1.40	310-650	1.40	310-655	1.40

SKODA LIVE CENTERS

Skoda Extra Heavy Duty Live Centers - CSN 243325

For clamping of heavy workpieces at lathes.

- The rigid structure and seating of the turning part is characterized by long service life
- The model EXTRA is commonly used for work at grinding machines
- Centres with the apex angle of 60° for reduction of deformations of the machine (tailstock, bed, headstock) from axial clamping forces
- The live centers are provided with shanks according to DIN 228 and ISO 296 (without clamping thread)

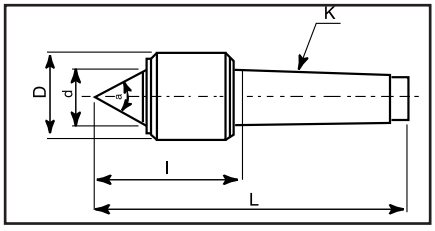

Morse Taper	D (in.)	d (in)	a	l (in.)	L (in.)	Load (lb)	Weight (lb)	Code No.	Price $
4	3.14	1.58	60°	4.10	7.85	3300	5	310-920	1,104.00
5	3.54	1.65	60°	5.60	9.48	5500	9	310-925	1,361.80
6	4.92	2.16	60°	6.42	13.38	11000	27	310-930	2,576.40
7	5.70	2.56	60°	7.80	15.25	17600	45	310-935	4,479.60

SPARE PARTS FOR EXTRA HEAVY DUTY LIVE CENTERS

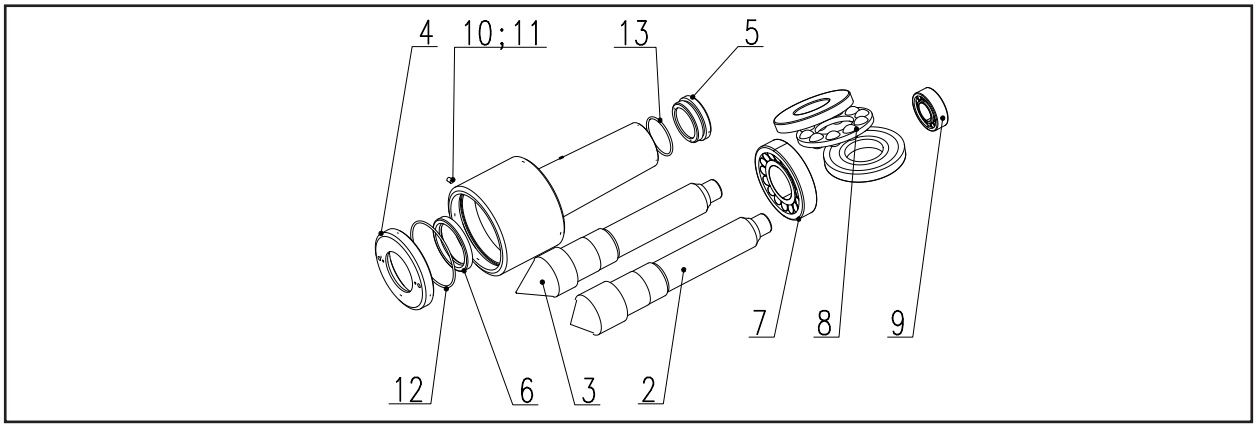

Spare Parts For Extra Heavy Duty Live Centers

Parts No.	Description	Code No.	Price $
MT 4-02	90° Point	310-802	363.40
4-03	60° Point	310-803	374.10
4-04	Ring	310-804	148.40
4-05	End Plug	310-805	5.20
4-06	Sealing	310-806	7.50
4-07	Roller Bearing	310-807	107.30
4-08	Thrust Bearing	310-808	151.30
4-09	Radial Bearing	310-809	171.50
4-10	Lock Screw	310-810	1.30
4-11	Packing Piece	310-811	48.90
4-12	Packing Ring	310-812	1.90
4-13	Packing Ring	310-813	1.50
MT 5-02	90° Point	310-816	452.20
5-03	60° Point	310-817	433.50
5-04	Ring	310-818	197.90
5.05	End Plug	310-819	13.50
5.06	Sealing	310-820	10.60
5-07	Roller Bearing	310-821	160.30
5-08	Thrust Bearing	310-822	179.80
5-09	Radial Bearing	310-823	180.30
5-10	Lock Screw	310-824	1.30
5-11	Packing Piece	310-825	105.30
5-12	Packing Ring	310-826	2.40
5-13	Packing Ring	310-827	1.50

Spare Parts For Extra Heavy Duty Live Centers

Parts No.	Description	Code No.	Price $
MT 6-02	90° Point	310-830	1,058.20
6-03	60° Point	310-831	1,097.20
6-04	Ring	310-832	123.20
6-05	End Plug	310-833	103.40
6-06	Sealing	310-834	13.50
6-07	Roller Bearing	310-835	233.40
6-08	Thrust Bearing	310-836	373.80
6-09	Radial Bearing	310-837	279.70
6-10	Lock Screw	310-838	2.10
6-11	Packing Piece	310-839	215.10
6-12	Packing Ring	310-840	5.00
6-13	Packing Ring	310-841	1.30

SKODA LIVE CENTERS

Skoda Precision CNC Live Centers - CSN 243327-II

- The centers are intended for NC lathes. Their face parts are formed to allow easy access of the tool to the workpiece, which is an advantage with workpieces of complex shapes
- A special ring is used to set the radial clearance of the centre. It also prevents cutting lubricant from leaking into the centre bearing space, and so extends the operational life of the centre
- Spindle-like point extends into shank where it is supported by a needle bearing, increasing rigidity, reducing point deflection and dampening vibration

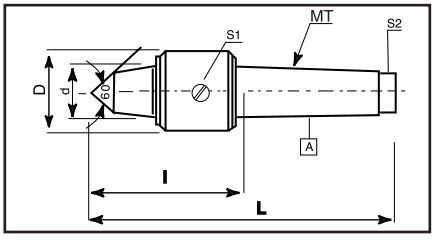

Morse Taper	D (in.)	d (in)	L (in.)	l (in.)	Load (lb)	Code No.	Price $
2	1.5	.695	5.25	2.65	1300	310-010	304.50
3	1.85	.750	6.75	3.50	1550	310-015	322.90
4	2.20	1.125	8.15	3.95	4840	310-020	376.40
5	3.10	1.375	10.50	4.85	7750	310-025	473.60

SPARE PARTS FOR CNC LIVE CENTERS

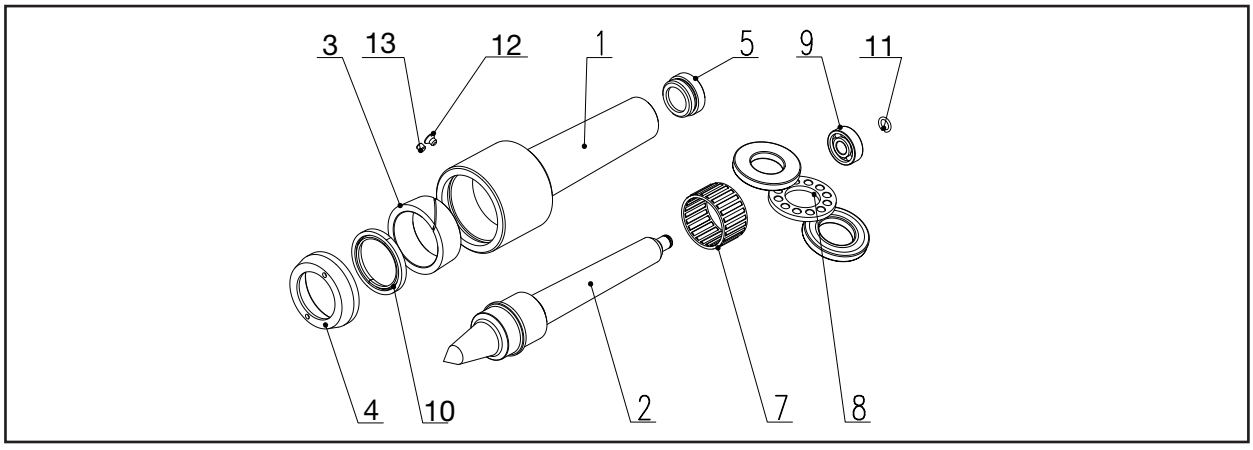

Spare Parts For CNC Live Centers

Parts No.	Description	Code No.	Price $
MT 2-02	Point	310-855	270.10
2-03	Ring	310-857	102.10
2-04	Set Ring	310-856	33.70
2-05	End Plug	310-858	7.70
2-07	Needle Bearing	310-860	33.70
2-08	Thrust Bearing	310-861	39.10
2-09	Radial Bearing	310-862	65.20
2-10	Packing Piece	310-859	32.60
2-11	Snap Ring	310-865	6.60
2-12	Countersink Screw	310-863	1.00
2-13	Lock Screw	310-864	1.10
MT 3-02	Point	310-869	349.70
3-03	Ring	310-871	103.00
3-04	Set Ring	310-870	35.90
3-05	End Plug	310-872	8.70
3-07	Needle Bearing	310-874	51.10
3-08	Thrust Bearing	310-875	45.70
3-09	Radial Bearing	310-876	67.40
3-10	Packing Piece	310-873	33.70
3-11	Snap Ring	310-879	6.60
3-12	Countersink Screw	310-877	1.40
3-13	Lock Screw	310-878	1.10

Spare Parts For CNC Live Centers

Parts No.	Description	Code No.	Price $
MT 4-02	Point	310-882	384.50
4-03	Ring	310-884	131.40
4-04	Set Ring	310-883	38.30
4-05	End Plug	310-885	8.70
4-07	Needle Bearing	310-887	57.60
4-08	Thrust Bearing	310-888	51.10
4-09	Radial Bearing	310-889	72.80
4-10	Packing Piece	310-886	34.80
4-11	Snap Ring	310-892	7.70
4-12	Countersink Screw	310-890	1.40
4-13	Lock Screw	310-891	1.10
MT 5-02	Point	310-895	343.80
5-03	Ring	310-897	88.00
5-04	Set Ring	310-896	43.50
5-05	End Plug	310-898	9.80
5-07	Needle Bearing	310-900	70.60
5-08	Thrust Bearing	310-901	61.90
5-09	Radial Bearing	310-902	107.60
5-10	Packing Piece	310-899	37.00
5-11	Snap Ring	310-905	9.80
5-12	Countersink Screw	310-903	1.40
5-13	Lock Screw	310-904	1.10

SKODA LIVE CENTERS

Skoda Extended Point Live Centers - CSN 243328

- Designed to keep dust, chips and coolant from coming inside the bearings
- Hardened and ground to 61-65 Rockwell
- Concentricity within .0002"

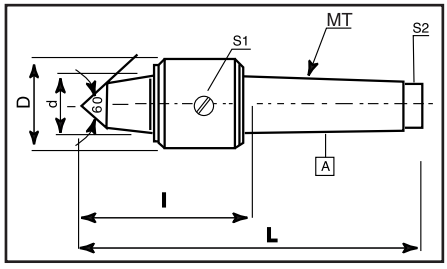

Morse Taper	D (in.)	d (in)	L (in.)	l (in.)	Load (lb)	Weight (lb)	Point Angle	Code No.	Price $
2	1.417	.866	5.059	2.560	594	.79	60°	310-160	168.40
3	1.850	1.181	6.575	3.386	704	1.85	60°	310-165	199.70
4	2.165	1.378	8.169	4.094	2200	3.19	60°	310-170	251.00
5	2.736	1.772	10.197	5.078	3960	7.04	60°	310-175	346.60
6	3.504	2.362	13.425	6.319	12600	17.05	60°	310-180	610.50

Skoda Heavy Duty Bull Nose Live Centers - CSN 243319

Designed to hold pipe and hollow work. Pipe head can be used as an all-round center for light work. Two matched angular contact bearings preloaded at the factory. This achieves good thrust and radial capacities. Bearings are protected by a combination steel shield and neoprene seal.

- Accuracy: ±0.0001"

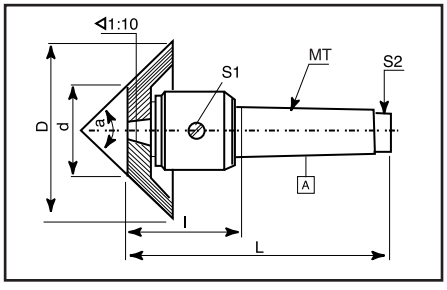

Morse Taper	a	D (in)	d (in.)	L (in.)	l (in.)	Load (lb)	Weight (lb)	Code No.	Price $
3	60°	3.150	1.378	6.380	3.189	880	4.62	310-140	665.20
4	60°	4.527	1.732	7.637	3.622	2860	9.68	310-145	1,072.90
5	60°	5.314	1.811	9.449	4.331	4400	17.60	310-150	1,518.30
6	60°	6.693	2.520	12.125	4.961	8800	51.70	310-155	3,636.90

SKODA LIVE CENTERS

Skoda Live Center Sets - CSN 243326

Features

- The rotating spindle is extended right through the tapered shank
- Two specially designed adjustable needle-roller bearings carry all radial loads
- A heavy duty ball thrust bearing takes all axial thrust
- Complete protection of bearings from the ingress of coolant, dirt or swarf is provided by the built-in oil-seal, which also prevents loss of lubricant

Morse	All		A	B-G	A		B		C		D			E			F		G		
Taper	d	l	L	L	D	D1	D	D1	D	D1	D	D1	D2	D	D1	D2	D	D1	D	Code No.	Price $
3	.590	.984	1.968	1.771	.787	.019	1.417	.236	2.480	1.299	1.417	1.102	.472	1.771	1.496	.866	.787	.098	.984	310-705	693.10
4	.784	1.181	2.362	2.086	.984	.019	1.771	.393	2.755	1.378	1.771	1.456	.669	2.480	2.086	1.181	.984	.196	1.259	310-710	819.30
5	.984	1.496	2.874	2.559	1.259	.039	2.204	.551	3.149	1.496	2.204	1.732	.787	2.775	2.362	1.417	1.259	.196	1.771	310-715	1,197.20
6	1.181	1.811	3.543	3.149	1.417	.039	2.755	.708	3.937	1.968	2.755	2.283	.950	3.937	3.464	2.126	1.417	.315	2.204	310-720	1,725.00

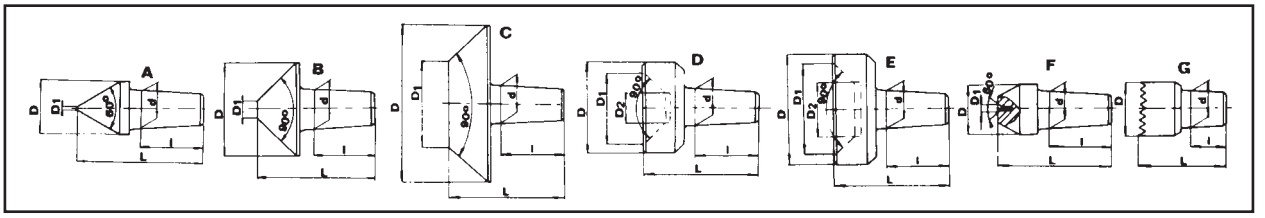

Parts For Skoda Live Center Sets

Morse Taper	Part A Code No.	Price $	Part B Code No.	Price $	Part C Code No.	Price $	Part D Code No.	Price $	Part E Code No.	Price $	Part F Code No.	Price $	Part G Code No.	Price $
3	310-724	126.00	310-726	182.50	310-728	223.70	310-730	191.20	310-732	190.10	310-734	171.60	310-736	144.50
4	310-744	145.60	310-746	208.50	310-748	272.60	310-750	198.80	310-752	206.40	310-754	154.20	310-756	156.40
5	310-764	156.40	310-766	221.60	310-768	338.90	310-770	228.10	310-772	331.20	310-774	179.20	310-776	177.10
6	310-784	171.60	310-786	283.50	310-788	449.60	310-790	294.30	310-792	427.90	310-794	202.00	310-796	237.90

Additional Items For Skoda Live Center Sets

Morse Taper	Live Center Only Code No.	Price $	Internal Point Code No.	Price $	Wooden Case Code No.	Price $	Drift Key Code No.	Price $
3	310-722	331.00	310-723	92.60	310-738	132.50	310-740	130.40
4	310-742	428.10	310-743	105.50	310-758	152.20	310-760	138.00
5	310-762	521.30	310-763	128.30	310-778	173.10	310-780	147.70
6	310-782	848.20	310-783	186.20	310-798	195.10	310-800	180.30

USSK013

Sowa METALWORKING SOLUTIONS

Sowa Tool & Machine Co. Ltd.
500 Manitou Drive
Kitchener, Ontario
N2G 4B6

Maumee, Ohio Branch
416 Dussel Drive
Maumee, Ohio
43537

Toll Free: 1-800-265-8221
Phone: (519) 748-5750
Fax: (519) 748-9304
Email: sales@sowatool.com
web: www.sowatool.com

Printed in Canada