To Order Contact: Exact Tooling / www.exacttooling.com / sales@exacttooling.com / 888-988-8820

COGSDILL TOOL PRODUCTS, INC.

Reaming

Shefcut®

PRECISION REAMING & BORING SOLUTIONS

ACCURATE SIZE

FINE FINISH

SUPERIOR HOLE GEOMETRY

To Order Contact: Exact Tooling / www.exacttooling.com / sales@exacttooling.com / 888-988-8820

Cogsdill

ENGINEERED SPECIALTY TOOLING SOLUTIONS

FOR THE WORLDWIDE MACHINE TOOL INDUSTRIES

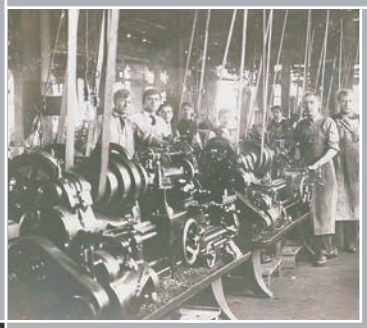

In 1914 Stuart A. Cogsdill set up shop in Detroit as a cutting tool regrinding and repair service. He soon began designing and manufacturing special tools for early automotive pioneers such as Henry Ford and the Dodge brothers, who relied on Cogsdill to develop innovative tooling solutions for tough manufacturing problems.

Currently owned and operated by the second and third generation of Stuart Cogsdill's descendants, Cogsdill offers its 21st century customers the same commitment that inspired its founder: we will develop and build innovative tooling solutions for your tough manufacturing problems.

Cogsdill has two operating units, one in the United States and one in the United Kingdom:

- **Cogsdill Tool Products, Inc. of Camden, South Carolina, USA** – corporate headquarters
- **Cogsdill-Nuneaton Ltd. of Nuneaton, England** – subsidiary of Cogsdill Tool Products

TOOLMAKERS SINCE 1914

To Order Contact: Exact Tooling / www.exacttooling.com / sales@exacttooling.com / 888-988-8820

Reaming

Shefcut®
PRECISION REAMING
& BORING SOLUTIONS

contents

2 THE SHEFCUT® DESIGN CONCEPT

6 PRECISION REAMING AND BORING SOLUTIONS

8 TOOL DESIGNS AND APPLICATIONS

22 SHEFCUT WORLD REAMER® SERIES

24 BLADE OPTIONS AND CUTTING LEAD GEOMETRIES

30 TOOL HOLDERS

34 SETTING FIXTURES

36 BLADE REPLACEMENT AND ADJUSTMENT

38 OPERATING REQUIREMENTS

40 MACHINING GUIDE FOR SHEFCUT REAMING

42 TOOL PERFORMANCE GUIDE

43 APPLICATION DATA SHEET

44 HOLE-FINISHING SOLUTIONS FROM COGSDILL

© COPYRIGHT 2015 COGSDILL TOOL PRODUCTS, INC.

CATALOG NO. 600 05-15

To Order Contact: Exact Tooling / www.exacttooling.com / sales@exacttooling.com / 888-988-8820

The Shefcut® design concept | overview

Shefcut® precision reamers and boring tools are designed to produce accurately sized, extremely straight and round bores with fine surface finishes. Multiple guide pads rigidly support a single, replaceable cutting blade for exceptional stability and alignment. Size control, surface finish quality, and hole geometry are superior, compared to results from conventional reamers and boring tools.

Each tool is designed for a specific cut diameter. Standard and custom tool designs are offered. Also available from Cogsdill: tool holders designed to complement and enhance the performance of Shefcut tools, and Shefcut setting fixtures for fast and accurate tool settings.

The Shefcut® design concept

Conventional multi-fluted reamers are guided by their cutting edges. The Shefcut design separates the cutting, guiding, and supporting functions of the tool for maximum advantage.

Because the cutting blade is independent of the tool body, it can be micro-adjusted over a limited range and pre-set to a cut diameter that the tool will then produce with consistent accuracy. Worn cutting blades can be replaced quickly and easily.

Pads that are independent of the cutting blade optimize the guiding and supporting functions of the tool. While the tool is in operation, cutting forces are opposed by pad reaction forces in perfect balance, providing rigid support for the blade edge. Pads can be tailored to suit the application; e.g., for interrupted cuts, piloted operations, etc.

To Order Contact: Exact Tooling / www.exacttooling.com / sales@exacttooling.com / 888-988-8820

Accurate sizing and superior bore geometry

The Shefcut tool produces hole geometry that is superior to the hole geometry produced by conventional reamers. Since multi-fluted reamers are guided by the cutting edges, they inevitably generate a lobed bore geometry (refer to figure 1). The Shefcut design produces better hole geometry due to rigid support of the cutting blade by the guide pads (see figure 2).

Bore tolerances, including straightness and roundness, can usually be held within 5 microns (.0002 inch) using Shefcut tools on typical shop equipment, provided that reasonable care is taken.

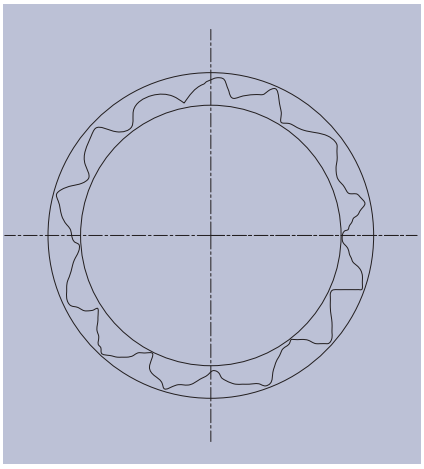

FIGURE 1

Typical lobed hole geometry generated by multi-fluted reamer.

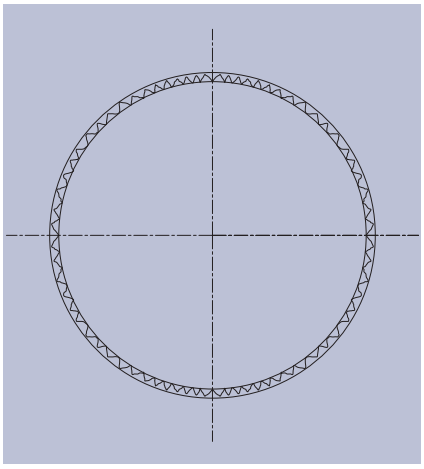

FIGURE 2

Typical hole geometry generated by Shefcut tool: no lobes, only surface finish irregularities.

Fine surface finishes

Shefcut produces lower surface finishes than conventional cutting tools. Surface finishes as fine as 0.1 micrometers (4 microinches) Ra or better are attainable in some materials.

The face of the Shefcut blade is highly polished to reduce friction between chip and blade, which in turn reduces the tendency toward edge build-up. The Shefcut blade has a very sharp edge, and the cutting geometry reduces chip thickness. These blade design advantages, along with the rigid support provided to the blade by the guide pads, enable the user to achieve excellent surface finishes.

Accurate and consistent performance

Advances in machine tool spindle speeds and accuracy, along with improved tool materials (such as PCD) and more accurate tool-to-spindle connections, have revolutionized manufacturing processes. Today's higher performance machine tools demand higher performance tooling. Shefcut ensures maximum efficiency from high-speed, highly accurate machines. The tools can be pre-set to achieve the required size and finish with minimal part-to-part variation.

To Order Contact: Exact Tooling / www.exacttooling.com / sales@exacttooling.com / 888-988-8820

Basic tool construction

The Shefcut tool features a single, indexable carbide cutting blade. Multiple guide pads, usually made of carbide, are positioned radially around the circumference of the tool body. Other blade and guide pad materials are available as required.

The blade is positioned longitudinally by a blade stop pin and diametrically by front and rear adjusting screws. A clamp holds the blade securely in place, providing support along the entire length of the blade. Clamping screw(s) hold the clamp in position. (Refer to figure 3.)

A variety of blade lead geometries, rake angles and materials are available.

Shefcut tools are available with any industry-standard shank, including HSK, ABS®*, straight, or morse taper shanks.

*License/Komet

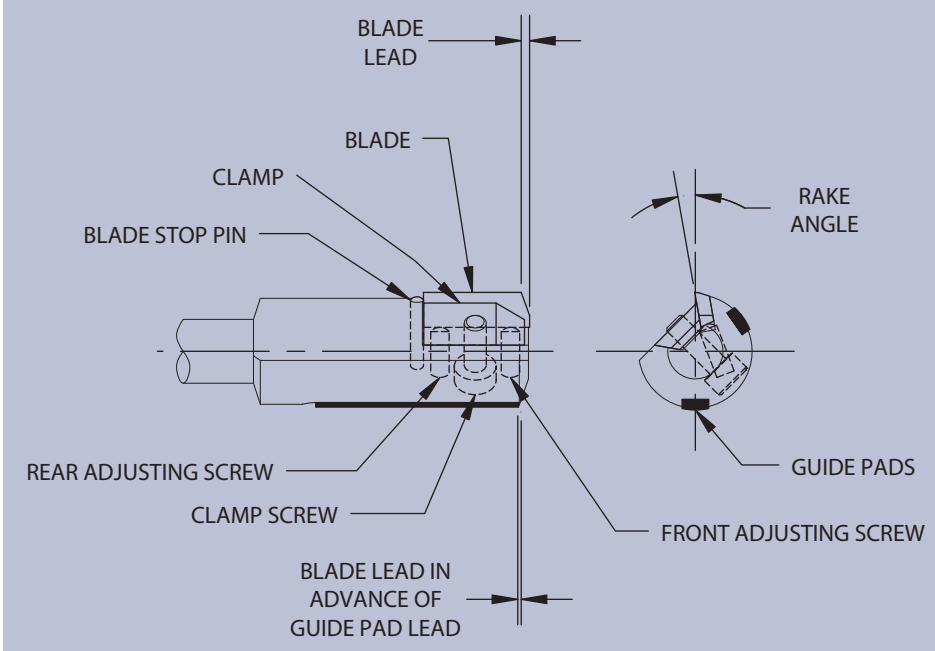

FIGURE 3

To Order Contact: Exact Tooling / www.exacttooling.com / sales@exacttooling.com / 888-988-8820

The Shefcut® design concept

can be adapted to a wide variety of standard and special tool configurations to suit your application.

To Order Contact: Exact Tooling / www.exacttooling.com / sales@exacttooling.com / 888-988-8820

Shefcut® precision reaming & boring solutions

Shefcut® tools are designed for **precision reaming or boring** operations.The manner in which the tools are applied results in some differences in tool design and machining set-up:

1 Shefcut tools are often used in **precision reaming** applications, where the tool is allowed to locate in the prepared bore.The Shefcut precision reamer is usually run at lower surface speeds, and is held directly in the spindle, in a floating tool holder or in a precision CNC holder. The tool body is "necked down" immediately behind the cutting head for increased flexibility, since the tool will seek the bore until the guide pads are fully engaged, at which point the tool will produce an accurate and straight bore.

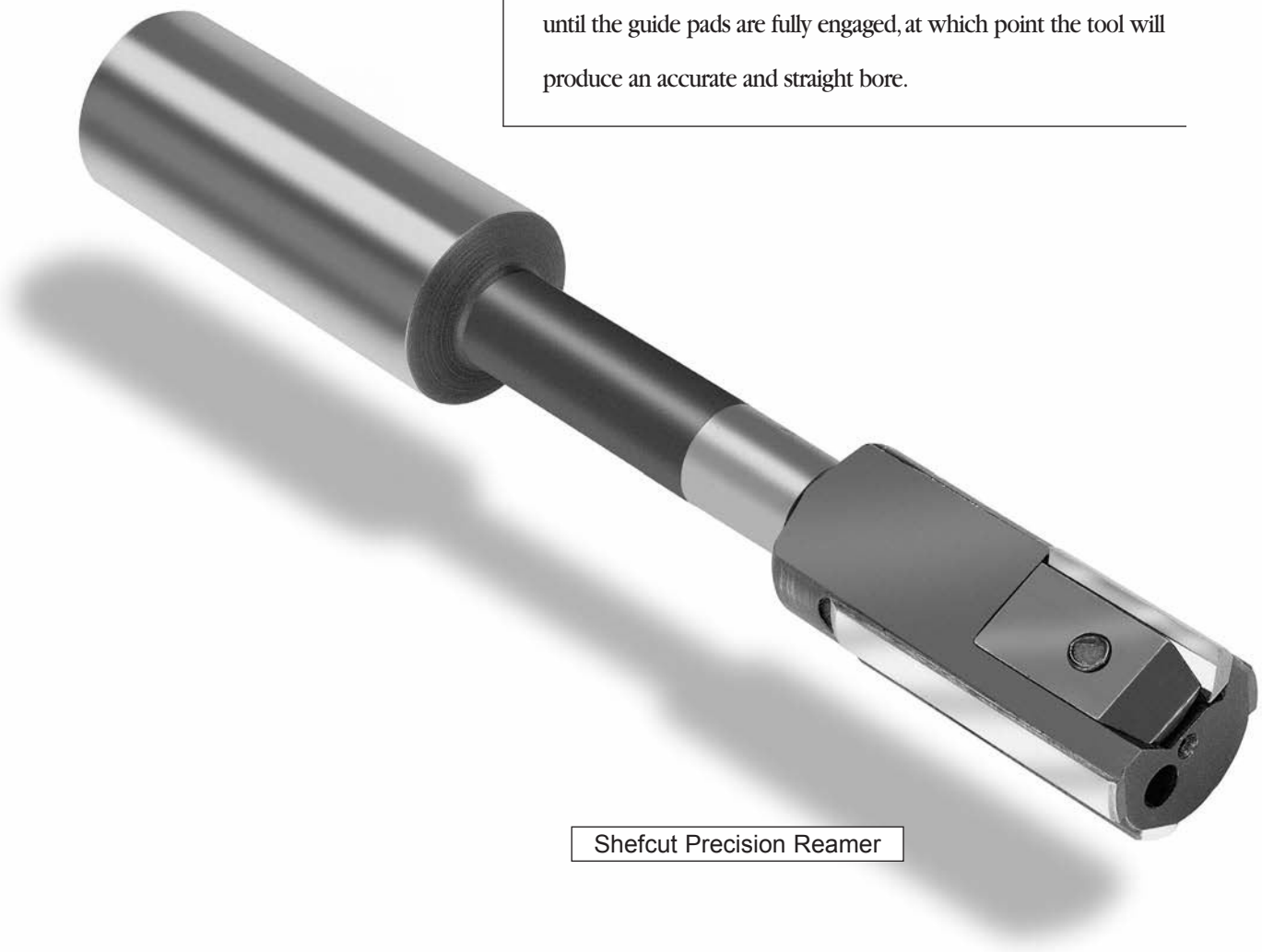

Shefcut Precision Reamer

To Order Contact: Exact Tooling / www.exacttooling.com / sales@exacttooling.com / 888-988-8820

2 Shefcut tools are also designed and built for **precision boring** applications, where the tool is used for accurate bore location. The Shefcut precision boring tool is usually run at higher spindle speeds in a rigid machining set-up, and can often be applied directly to a cast bore. The tool is held with a highly accurate spindle connection (e.g., HSK), or in an adjustable tool holder. The precision boring tool is designed for enhanced rigidity for very accurate bore location.

Regardless of which way the Shefcut tool is applied, it is based on the **same design concept:** a single, replaceable cutting blade supported by guide pads, providing exceptional stability and alignment for superior results.

Shefcut Precision Boring Tool

To Order Contact: Exact Tooling / www.exacttooling.com / sales@exacttooling.com / 888-988-8820

Shefcut® tool designs and applications

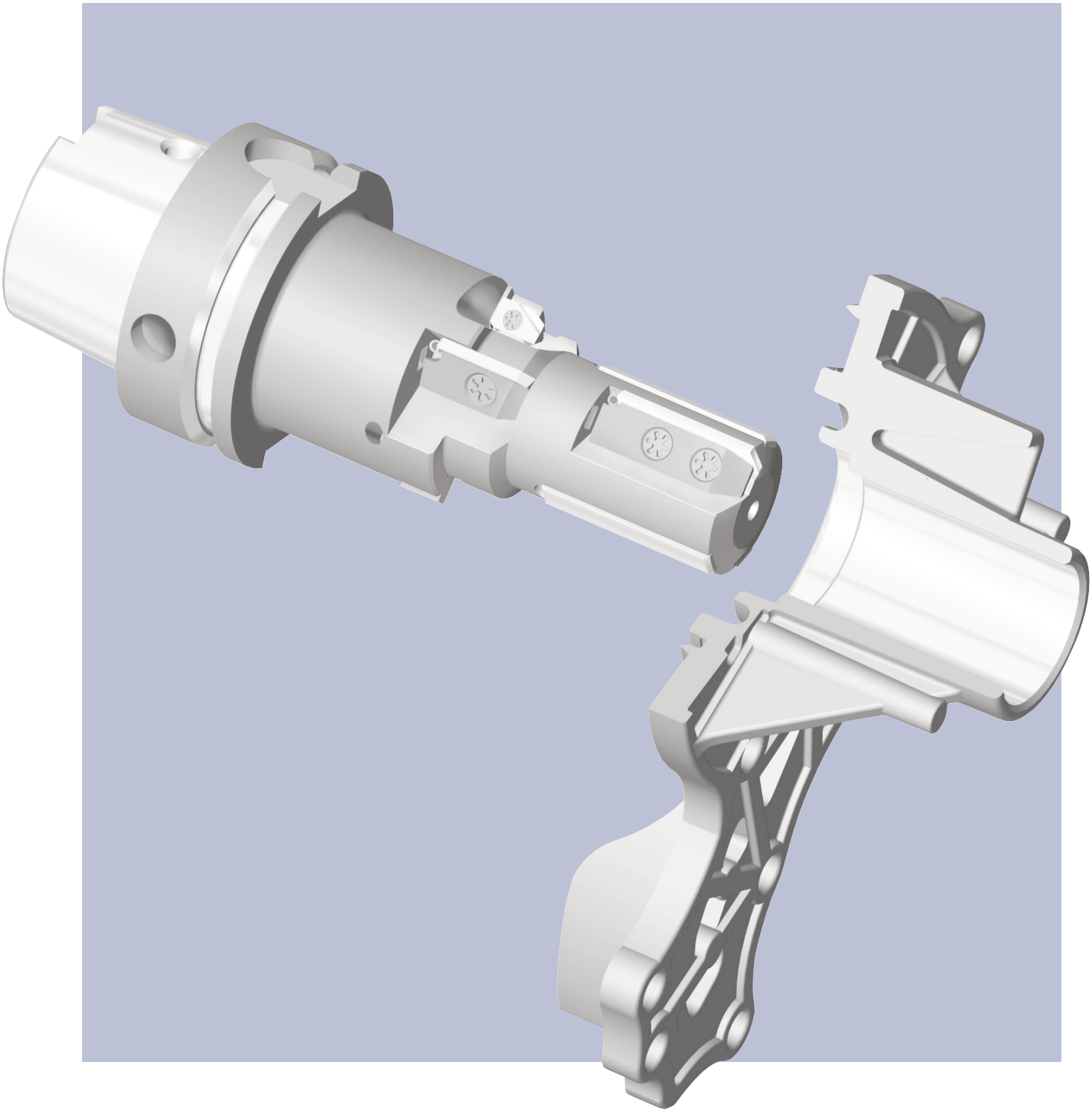

To Order Contact: Exact Tooling / www.exacttooling.com / sales@exacttooling.com / 888-988-8820

The Shefcut® design concept is tailored to suit a wide variety of applications, including tools for multiple or step diameters, short or extended work lengths, extended pad lengths, front pilots, or special shanks, and tools for use in applications where unique machining set-up requirements exist.

Cogsdill offers custom tool design and applications engineering assistance.

NOTE: A completed Application Data Sheet (see page 43) should be enclosed with your request for quotation, along with your part print.

A few examples illustrating our special tool design capabilities and applications follow.

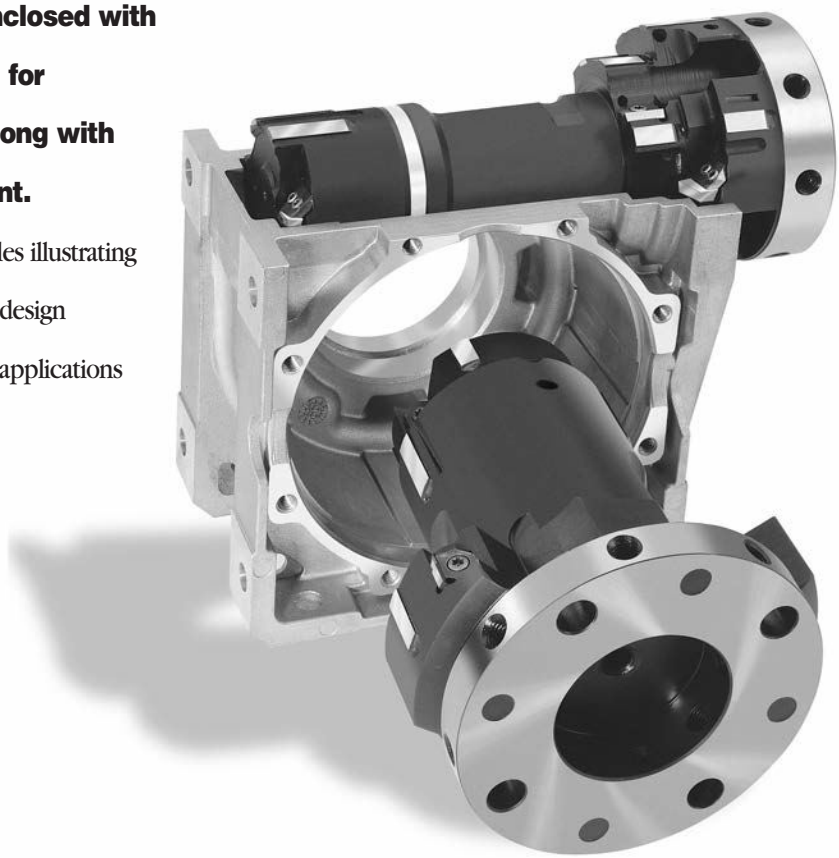

Shefcut precision boring tools machine
multi-feature bores and faces for specialized worm gear box

To Order Contact: Exact Tooling / www.exacttooling.com / sales@exacttooling.com / 888-988-8820

Tool designs

Custom tool designs to suit the application

To Order Contact: Exact Tooling / www.exacttooling.com / sales@exacttooling.com / 888-988-8820

Tool designs

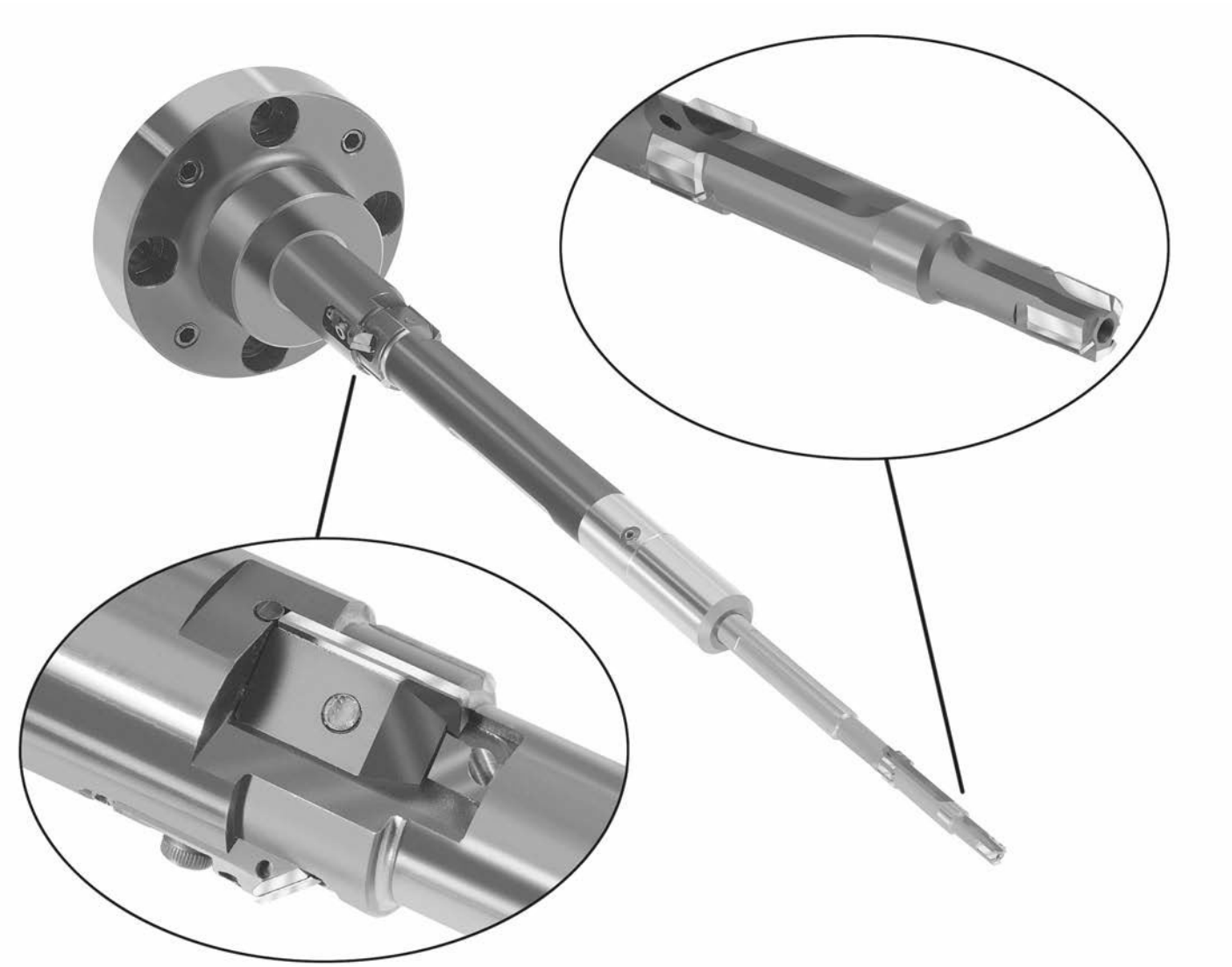

Combination tool design with Shefcut and brazed diamond tooling

To Order Contact: Exact Tooling / www.exacttooling.com / sales@exacttooling.com / 888-988-8820

Applications

Application 1

CONNECTING ROD

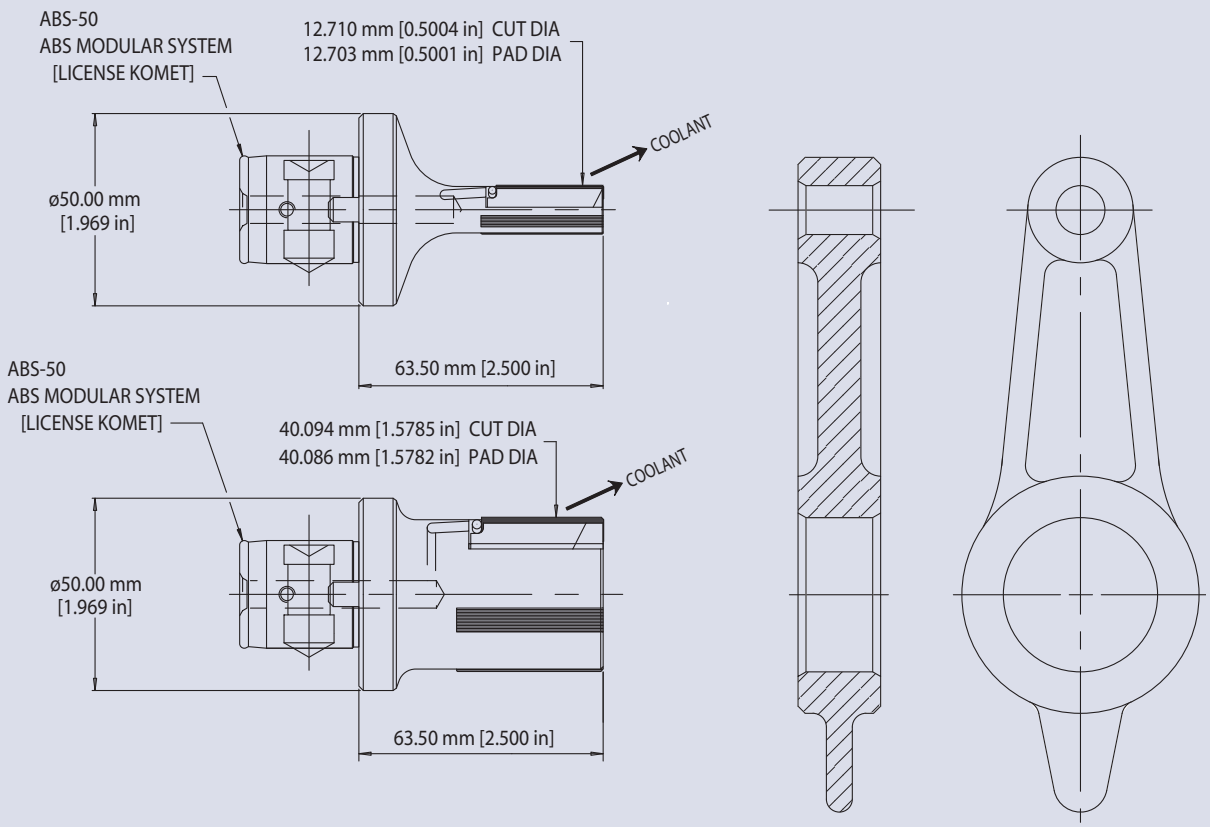

REFER TO APPLICATIONS MACHINING DATA, PAGE 21.

To Order Contact: Exact Tooling / www.exacttooling.com / sales@exacttooling.com / 888-988-8820

Applications

Application 2

CYLINDER HEAD VALVE SEAT & GUIDE

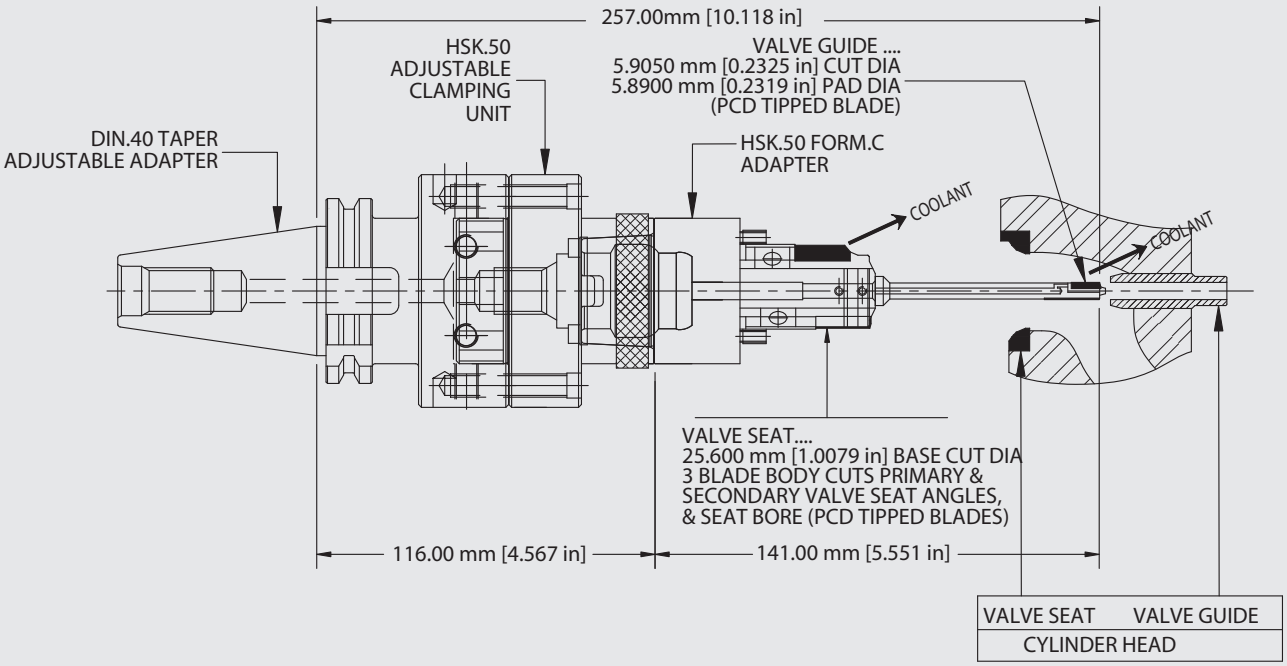

REFER TO APPLICATIONS MACHINING DATA, PAGE 21.

To Order Contact: Exact Tooling / www.exacttooling.com / sales@exacttooling.com / 888-988-8820

Applications

Application 3

SHIFT BAR HOUSING

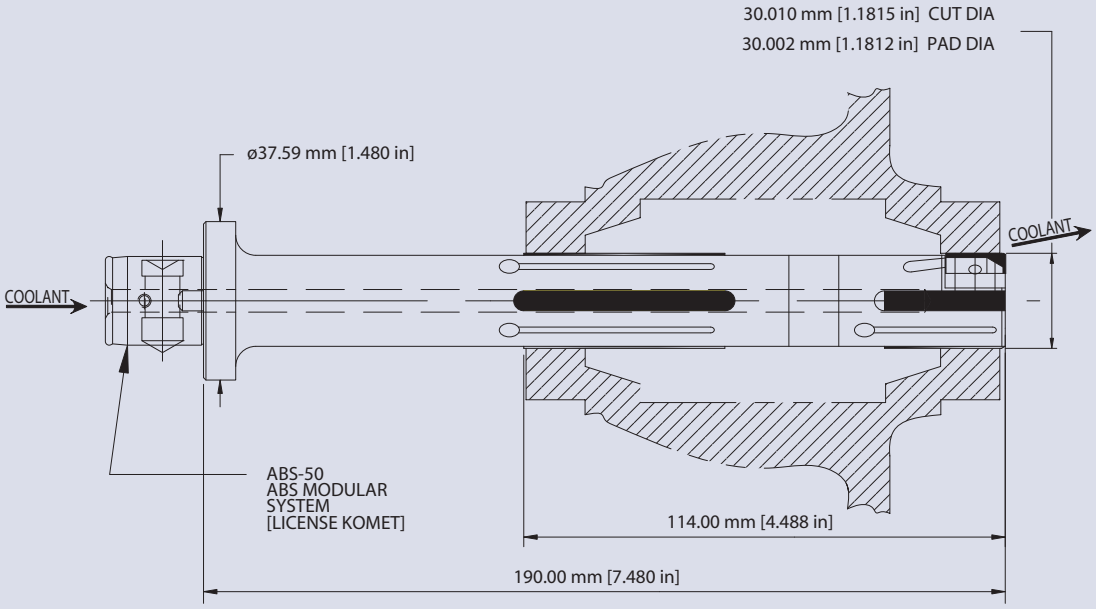

Application 4

PISTON WRIST PIN BORE

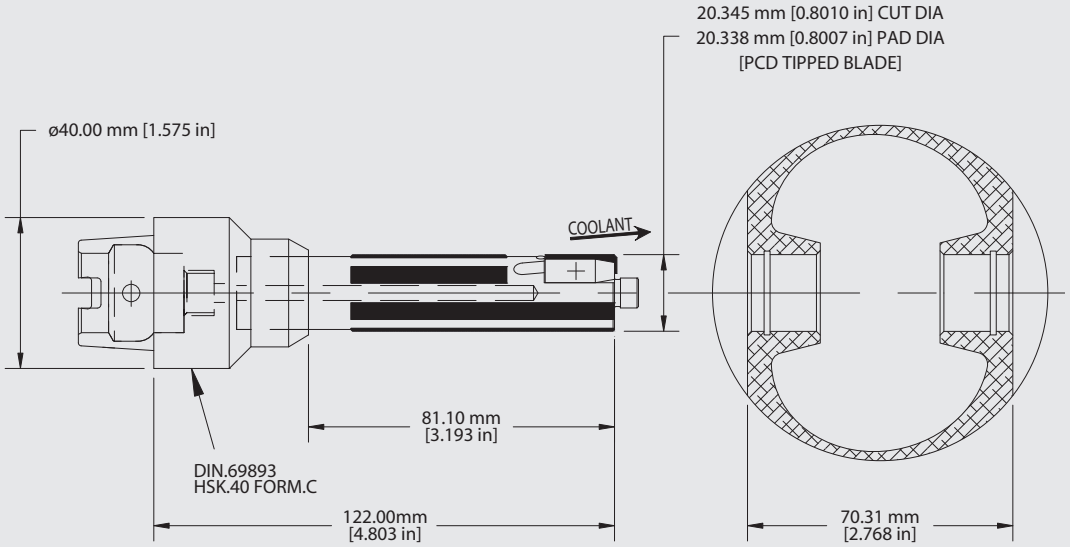

REFER TO APPLICATIONS MACHINING DATA, PAGE 21.

To Order Contact: Exact Tooling / www.exacttooling.com / sales@exacttooling.com / 888-988-8820

Applications

Application 5

AUTOMOTIVE CYLINDER HEAD CAM SHAFT BORES

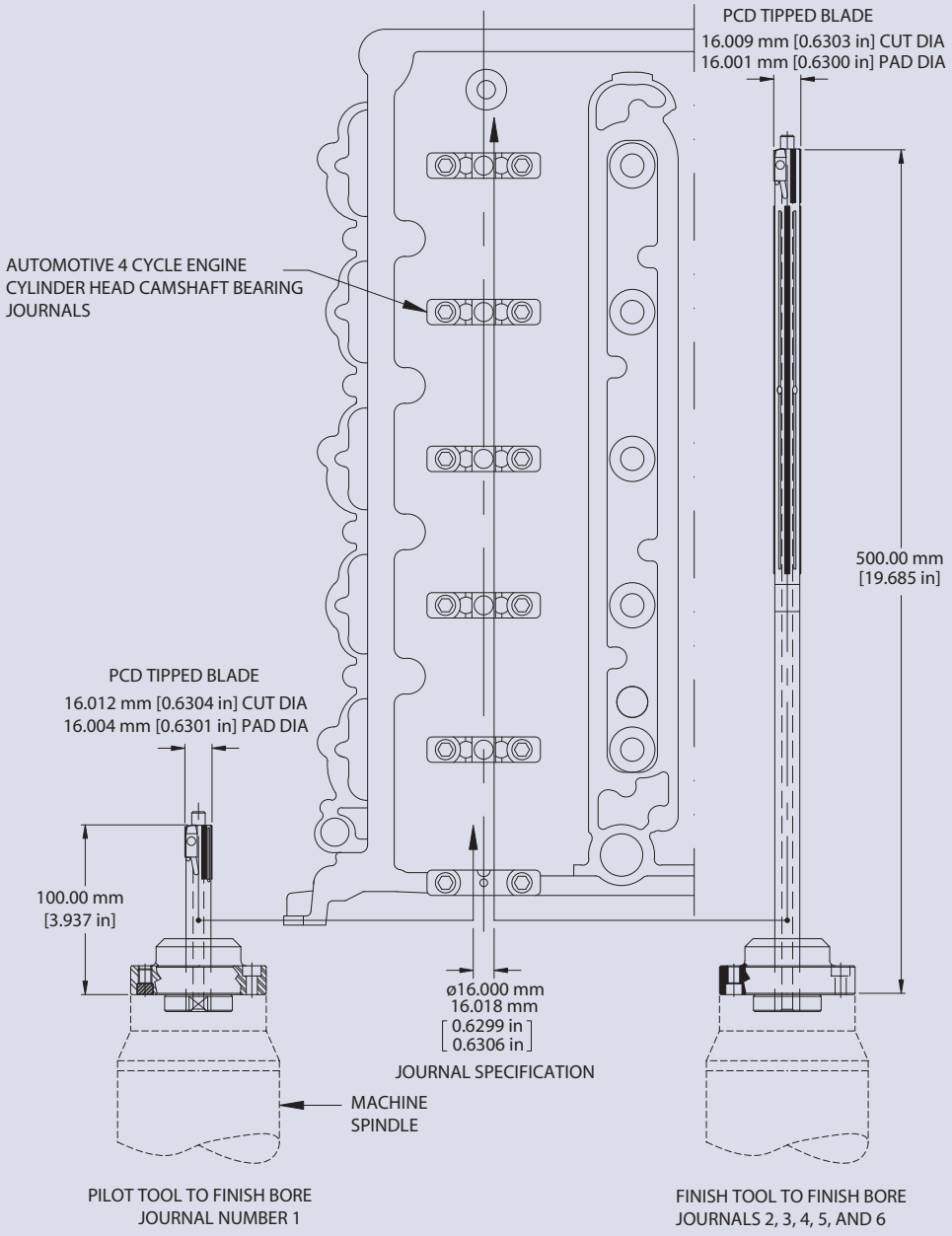

REFER TO APPLICATIONS MACHINING DATA, PAGE 21.

To Order Contact: Exact Tooling / www.exacttooling.com / sales@exacttooling.com / 888-988-8820

Applications

Application 6

AUTOMOTIVE CYLINDER HEAD CAM SHAFT BORES

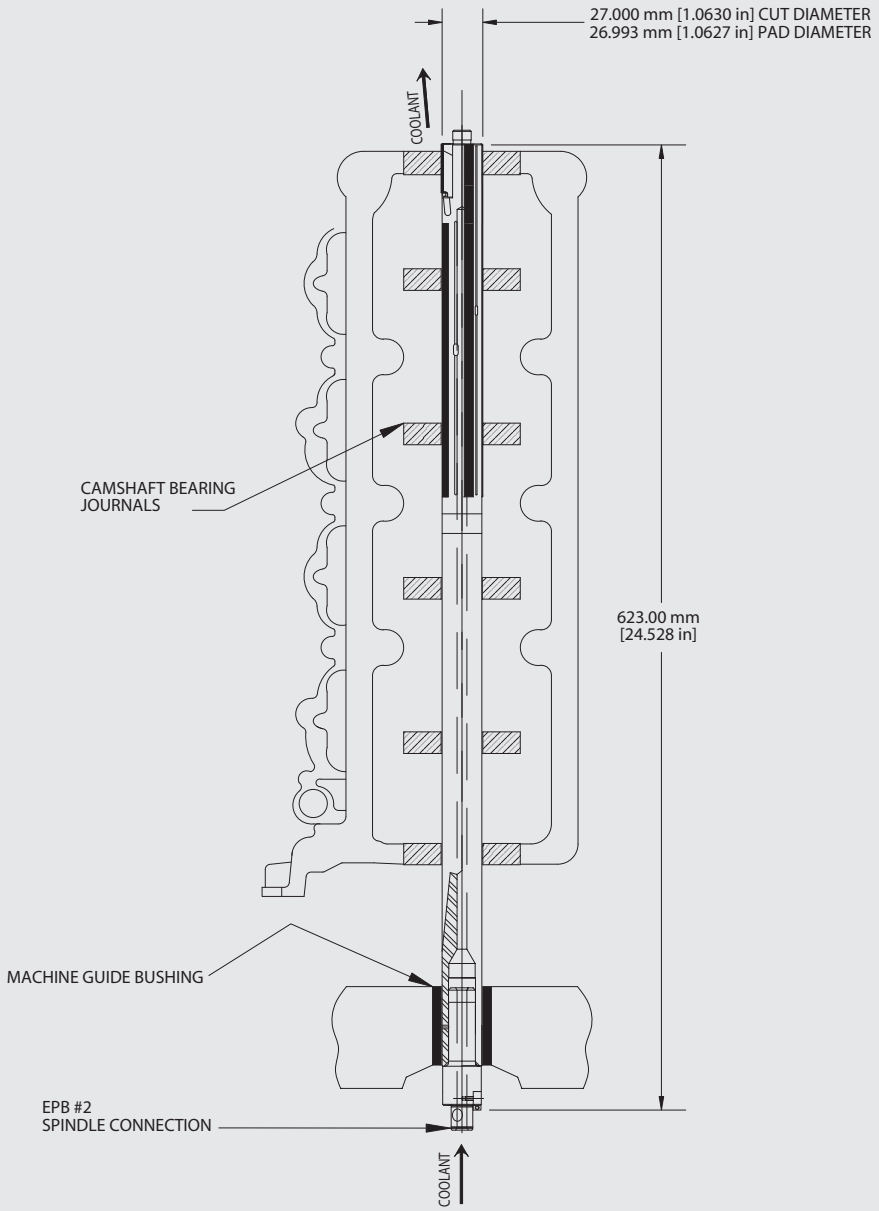

REFER TO APPLICATIONS MACHINING DATA, PAGE 21.

To Order Contact: Exact Tooling / www.exacttooling.com / sales@exacttooling.com / 888-988-8820

Applications

Application 7

CLUTCH HOUSING

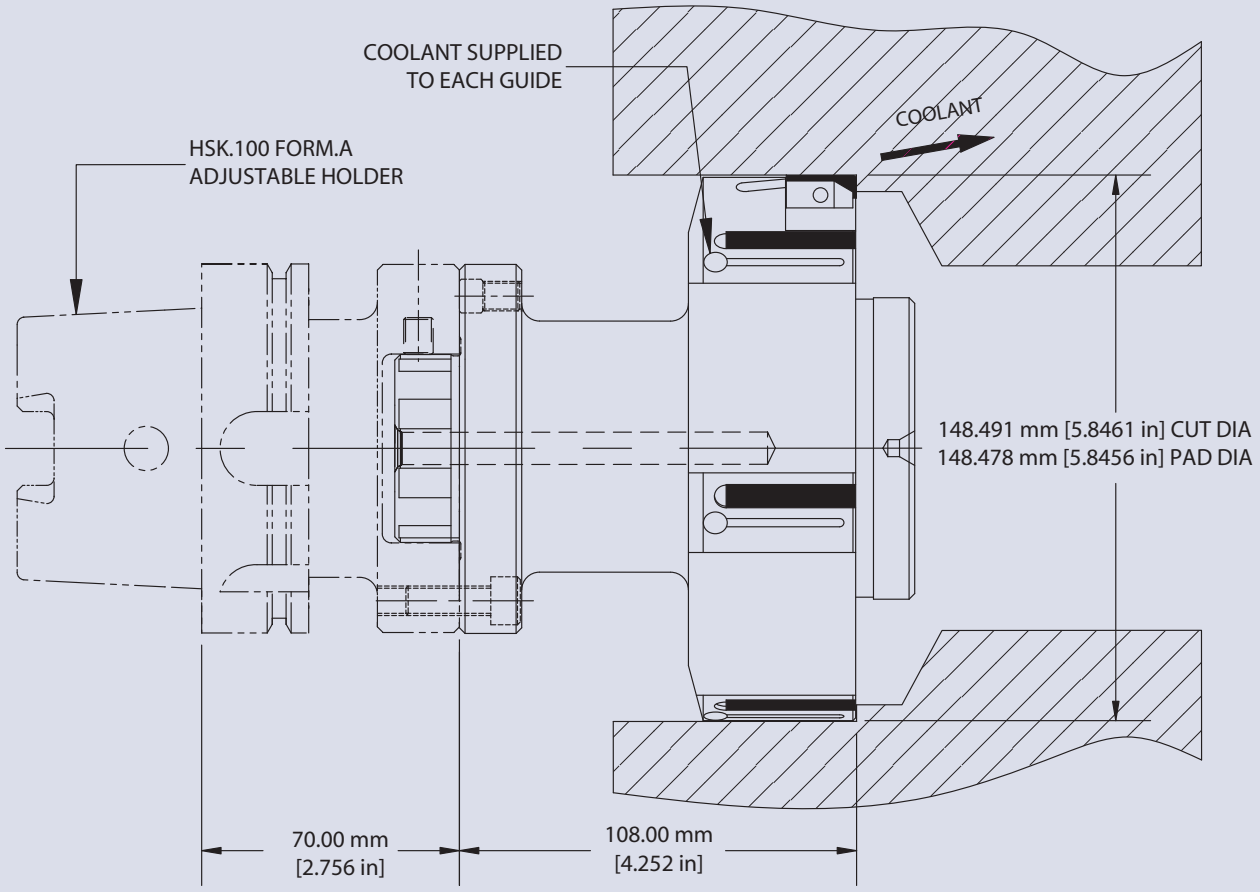

REFER TO APPLICATIONS MACHINING DATA, PAGE 21.

To Order Contact: Exact Tooling / www.exacttooling.com / sales@exacttooling.com / 888-988-8820

Applications

Application 8

SPOOL VALVE

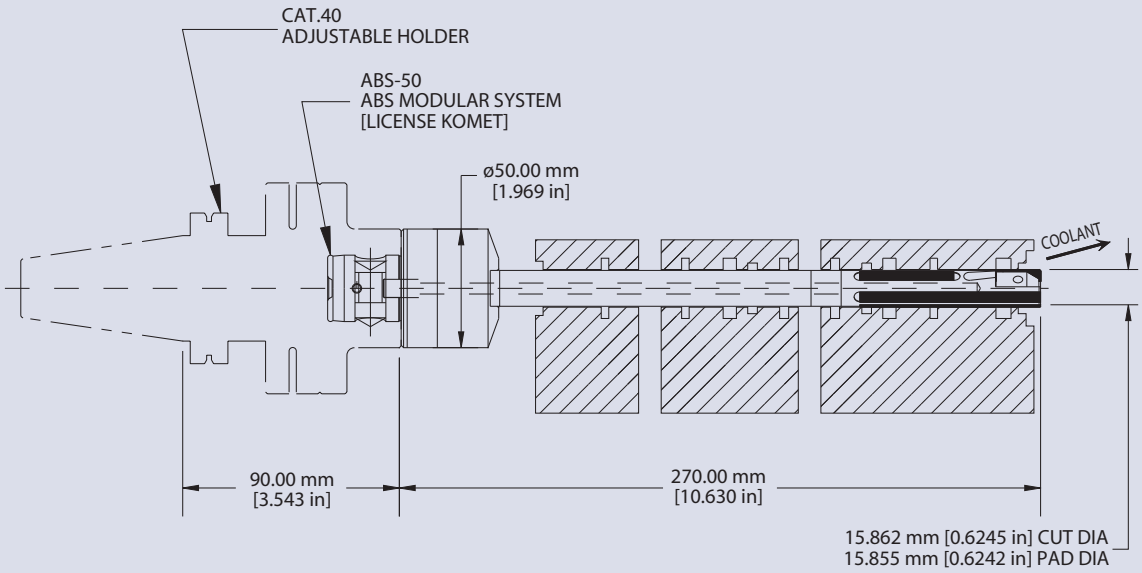

Application 9

AXLE HOUSING

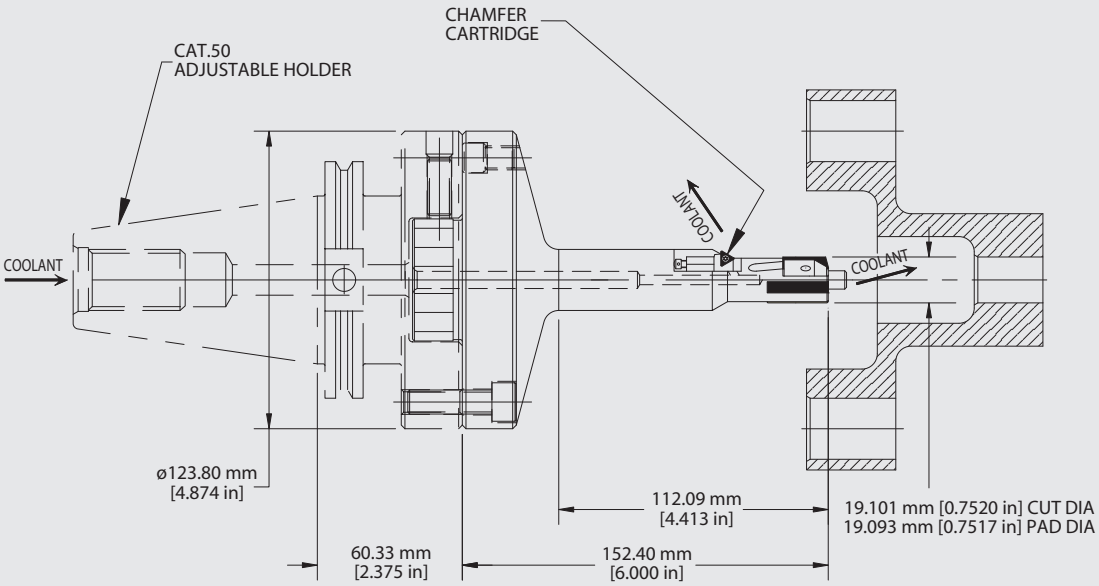

REFER TO APPLICATIONS MACHINING DATA, PAGE 21.

To Order Contact: Exact Tooling / www.exacttooling.com / sales@exacttooling.com / 888-988-8820

Applications

Application 10

PISTON WRIST PIN BORE

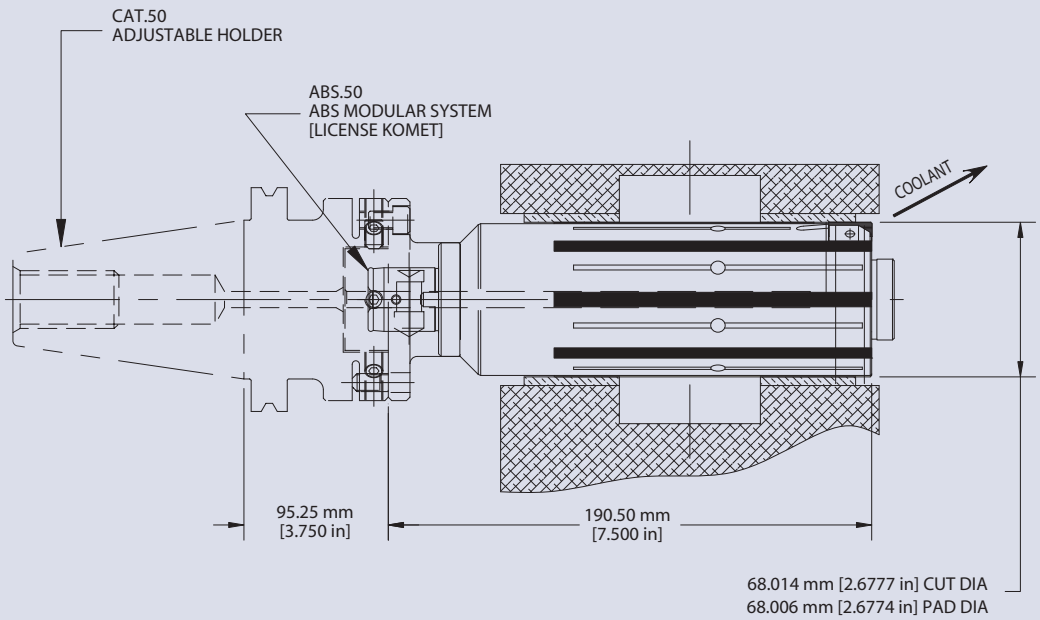

Application 11

AIRCRAFT FABRICATION

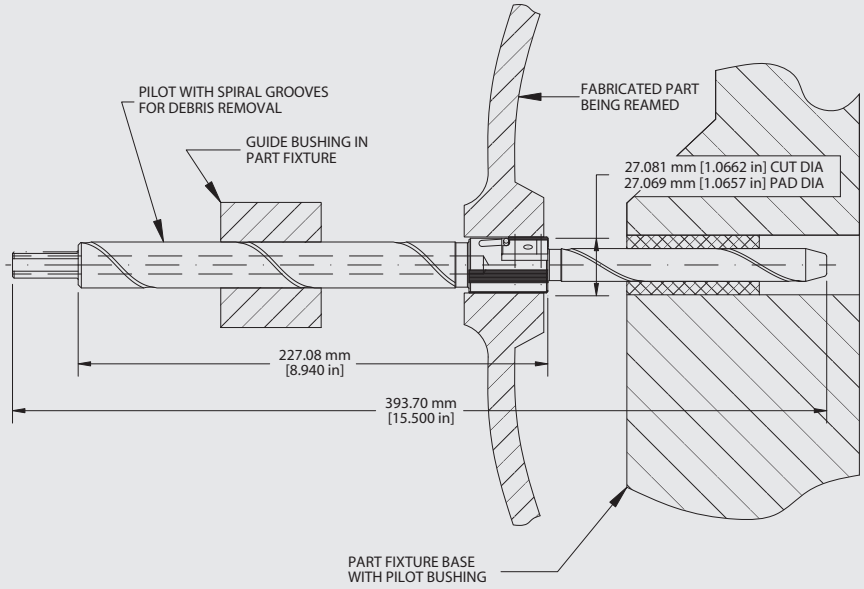

REFER TO APPLICATIONS MACHINING DATA, PAGE 21.

To Order Contact: Exact Tooling / www.exacttooling.com / sales@exacttooling.com / 888-988-8820

Applications

Application 12

FRONT STEERING KNUCKLE

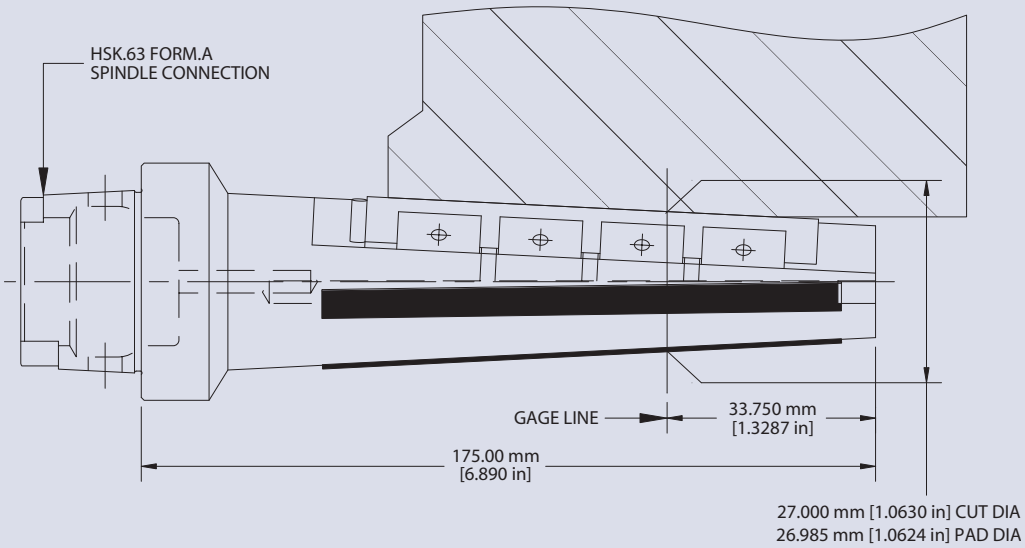

1:10 TAPER REAMER

Application 13

AXLE FLANGE

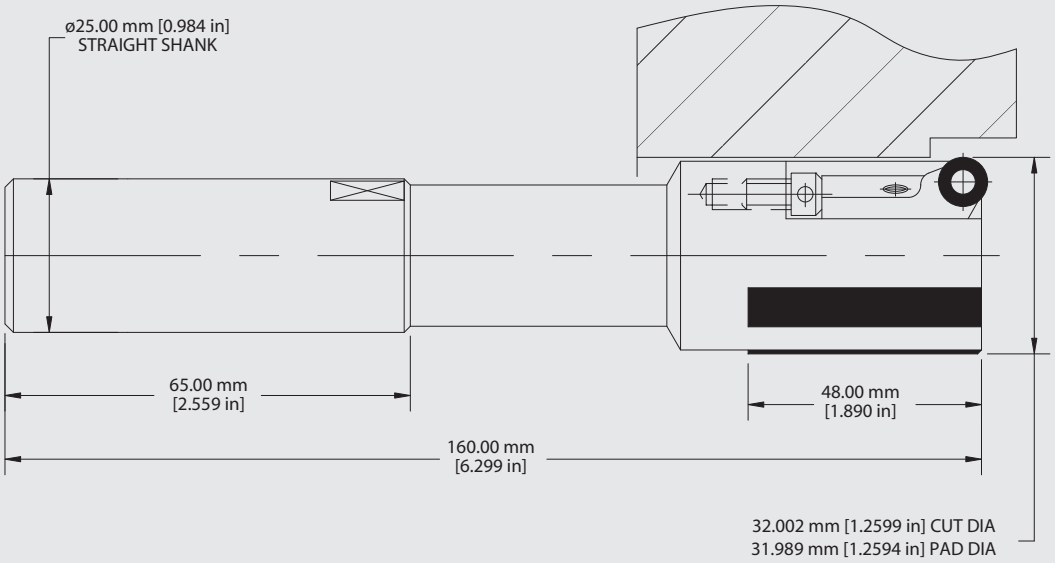

BUTTON REAMER

REFER TO APPLICATIONS MACHINING DATA, PAGE 21.

To Order Contact: Exact Tooling / www.exacttooling.com / sales@exacttooling.com / 888-988-8820

Applications machining data

Application 1

Component: Connecting rod
Material: Aluminum
Machine: Boring machine
Spindle speed: 4000 RPM
Feed rate: 0.18mm/rev (0.007 IPR)
Cycle time: 3.5 seconds
Coolant: Premium soluble (8:1)
Size achieved: ±0.0038mm (0.00015 in.)
Finish achieved: 0.5 micrometers (20 microinches) Ra

Application 2

Component: Valve seat and guide
Material: Sintered steel
Machine: Machining center
Spindle speed: Valve guide—5000 RPM; Valve seat—3000 RPM
Feed rate: Valve guide—0.15mm/rev (.006 IPR); Valve seat—0.1mm/rev (.004 IPR)
Cycle time: 10.6 seconds
Coolant: 8% soluble
Size achieved: ±0.002mm (.00008 in.)
Finish achieved: 0.7 micrometers (28 microinches) Ra

Application 3

Component: Shift bar housing
Material: Ductile cast iron
Machine: Horizontal machining center
Spindle speed: 1250 RPM
Feed rate: 0.25mm/rev (0.010 IPR)
Cycle time: 6 to 8 seconds
Coolant: Water soluble
Size achieved: 30.01mm (1.1815 in.)
Finish achieved: .63 to .75 micrometers (25 to 30 microinches) Ra

Application 4

Component: Piston wrist pin bore
Material: Cast aluminum alloy
Machine: Transfer line
Spindle speed: 3750 RPM
Feed rate: 0.15mm/rev (0.006 IPR)
Cycle time: 2 to 3 seconds
Coolant: Water soluble
Size achieved: 20.35mm (.8010 in.)
Finish achieved: 0.25 micrometers (10 microinches) Ra

Application 5

Component: Automotive cylinder head cam shaft bores
Material: Aluminum alloy
Machine: Transfer line
Spindle speed: 4000 RPM
Feed rate: 0.13mm/rev (.005 IPR)
Coolant: Semi-synthetic (10%)
Size achieved: 16.000/16.018mm (.6299/.6306 in.)
Finish achieved: .25 micrometers (10 microinches) Ra

Application 6

Component: Automotive cylinder head cam shaft bores
Material: Die-cast aluminum
Machine: Transfer line
Spindle speed: 4000 RPM
Feed rate: 0.13mm/rev (.005 IPR)
Cycle time: 30 seconds
Coolant: Semi-synthetic (10%)
Size achieved: Better than spec—±0.01mm (±0.0005 in.)
Finish achieved: Better than spec (0.75 micrometers or 30 microinches Ra)
Parts per PCD blade: 100,000

Application 7

Component: Clutch housing
Material: Aluminum
Machine: Horizontal machining center
Spindle speed: 200 RPM
Feed rate: 0.15mm/rev (.006 IPR)
Cycle time: 2 minutes
Coolant: Water soluble (10%)
Size achieved: 148.493/148.487mm (5.846/5.845 in.)
Finish achieved: 0.4 micrometers (16 microinches) Ra

Application 8

Component: Spool valve
Material: Gray cast iron
Machine: Vertical machining center
Spindle speed: 1500 RPM
Feed rate: 0.13mm/rev (.005 IPR)
Cycle time: 1 minute
Coolant: Water soluble
Size achieved: 15.86mm (.6245 in.)
Finish achieved: 0.8 micrometers (32 microinches) Ra

Application 9

Component: Axle housing
Material: Aluminum
Machine: CNC machining center
Spindle speed: 1300 RPM
Feed rate: 0.1mm/rev (.004 IPR)
Cycle time: 11 seconds per bore
Coolant: Mineral oil (8%)
Size achieved: 19.10 ±.002mm (.7520 ±.00008 in.)
Finish achieved: 0.1 micrometers (4 microinches) Ra

Application 10

Component: Piston (wrist pin bore)
Material: Brass
Machine: Horizontal machining center
Spindle speed: 400 RPM
Feed rate: 0.20mm/rev (.008 IPR)
Coolant: Water soluble
Size achieved: 68.01/68.00mm (2.6777/2.6774 in.)
Finish achieved: .3 to .4 micrometers (12 to 16 microinches) Ra

Application 11

Component: Aircraft fabrication
Material: Stainless steel
Machine: Air drill
Spindle speed: 250 RPM
Feed rate: 0.15mm/rev (.006 IPR)
Cycle time: 3 minutes
Coolant: Soluble (15:1)
Size achieved: 27.081mm (1.0662 in.)
Finish achieved: 0.8 micrometers (32 microinches) Ra or lower

Application 12

Component: Front steering knuckle
Material: Gray cast iron
Machine: Machining center
Spindle speed: 235 RPM
Feed rate: 0.3mm/rev (.012 IPR)
Cycle time: 11 seconds
Coolant: Soluble (10%)
Size achieved: To print specification
Finish achieved: .6 micrometers (24 microinches) Ra

Application 13

Component: Axle flange
Material: Gray cast iron
Machine: Lathe
Spindle speed: 2000 RPM
Feed rate: 0.18mm/rev (.007 IPR)
Cycle time: 10 seconds
Coolant: Semi-synthetic (5%)
Size achieved: 0.003mm (.0001 in.)
Finish achieved: 0.7 micrometers (28 microinches) Ra

To Order Contact: Exact Tooling / www.exacttooling.com / sales@exacttooling.com / 888-988-8820

Shefcut World Reamer® series

The Shefcut World Reamer® program includes tools of a standard design suited for precision reaming applications. The World Reamer features a rigid blade-clamping system offering the greatest possible amount of chip clearance for maximum tool performance. The tools are available for popular hole sizes, both metric and inch. They are offered in two lengths, with through-hole or blind-bore internal coolant, or external flood coolant. Tools with cermet pads are available on request for ferrous material applications.

World Reamers are available on a quick delivery basis. Blanks are stocked and tools are built to order to suit a specific cut diameter.

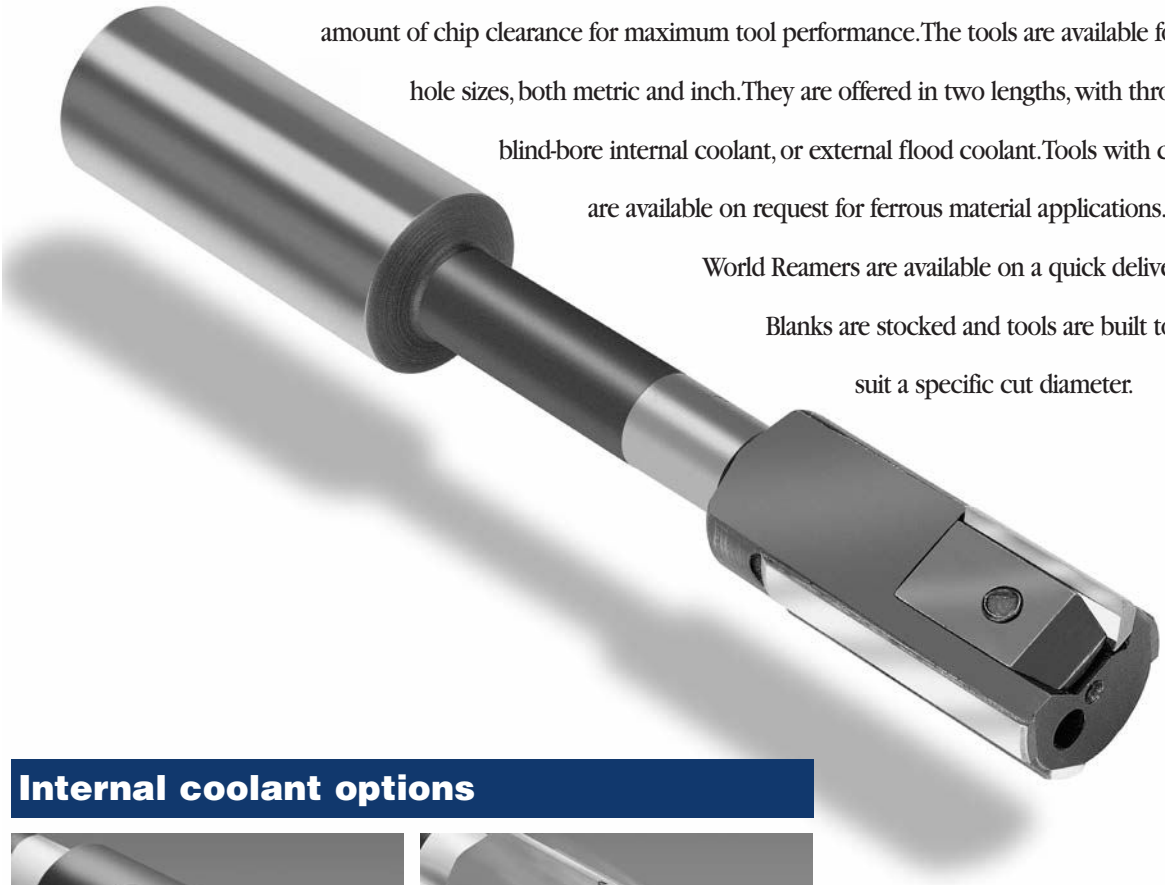

Internal coolant options

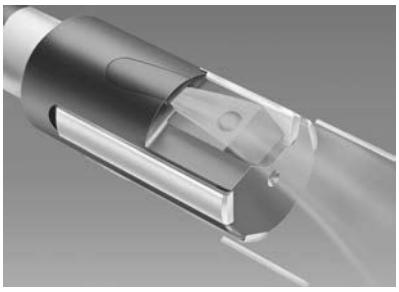

For **through-hole** tools with internal coolant, the coolant flows through the center of the tool and exits above the blade and pads, flushing chips out of the bore ahead of the tool.

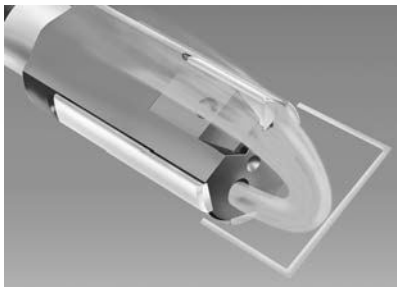

For **blind-bore** tools with internal coolant, the coolant exits at the end of the cutting head, flushing the chips back and out of the entrance of the blind bore.

To Order Contact: Exact Tooling / www.exacttooling.com / sales@exacttooling.com / 888-988-8820

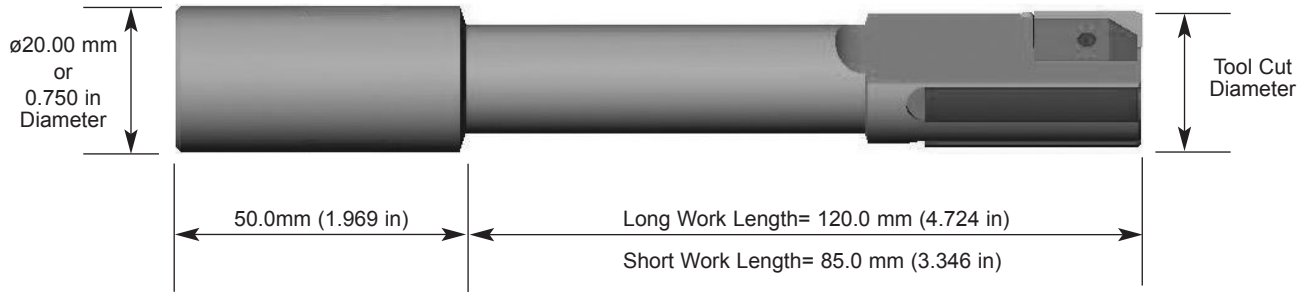

Note: ø8.0 to ø11.1 mm tools are available as standard only in 85.0 mm work length

TOOL CUT DIAMETER						
	DIAMETER RANGE*					
NOMINAL SIZE	MM	INCH	BLADE	CLAMP	ADJUSTING SCREW (2 REQUIRED)	CLAMP SCREW
8.0	7.9/8.1	.311/.319	GO	WR-GO	2.5 x .45 x 4.0 LG	2 x .4 x 4.0 LG (2 Required)
9.5	9.4/9.6	.370/.378	G19	WR-G19	2.5 x .45 x 4.0 LG	2.5 x .45 x 4.5 LG (2 Required)
10.0	9.9/10.1	.390/.398	G19	WR-G19	2.5 x .45 x 4.0 LG	2.5 x .45 x 5.0 LG (2 Required)
11.1	11.0/11.2	.433/.441	G19	WR-G19	2.5 x .45 x 4.0 LG	2.5 x .45 x 5.0 LG (2 Required)
12.0	11.85/12.15	.467/.478	G19	WR-G19	2.5 x .45 x 4.0 LG	2.5 x .45 x 5.0 LG (2 Required)
12.7	12.55/12.85	.494/.506	G29	WR-G29	3 x .5 x 6.0 LG	2.5 x .45 x 7.0 LG (2 Required)
14.0	13.85/14.15	.545/.557	G29	WR-G29	3 x .5 x 6.0 LG	2.5 x .45 x 7.0 LG (2 Required)
14.3	14.15/14.45	.557/.569	G29	WR-G29	3 x .5 x 6.0 LG	2.5 x .45 x 7.0 LG (2 Required)
16.0	15.85/16.15	.624/.636	G39	WR-G39	3 x .5 x 6.0 LG	4 x .7 x 8.0 LG
17.0	16.85/17.15	.663/.675	G39	WR-G39	3 x .5 x 6.0 LG	4 x .7 x 8.0 LG
17.4	17.25/17.55	.679/.691	G39	WR-G39	3 x .5 x 6.0 LG	4 x .7 x 8.0 LG
18.0	17.85/18.15	.703/.715	G39	WR-G39	3 x .5 x 6.0 LG	4 x .7 x 8.0 LG
19.0	18.75/19.25	.738/.758	G49	WR-G49	4 x .7 x 7.0 LG	4 x .7 x 10.0 LG
20.0	19.75/20.25	.777/.797	G49	WR-G49	4 x .7 x 7.0 LG	4 x .7 x 10.0 LG
20.6	20.35/20.85	.801/.821	G49	WR-G49	4 x .7 x 7.0 LG	4 x .7 x 10.0 LG
22.2	21.95/22.45	.864/.884	G49	WR-G49	4 x .7 x 7.0 LG	4 x .7 x 10.0 LG
24.0	23.75/24.25	.935/.955	G49	WR-G49	4 x .7 x 12.0 LG	4 x .7 x 14.0 LG
25.0	24.75/25.25	.974/.994	G49	WR-G49	4 x .7 x 12.0 LG	4 x .7 x 14.0 LG
25.4	25.15/25.65	.990/1.010	G49	WR-G49	4 x .7 x 12.0 LG	4 x .7 x 14.0 LG
28.0	27.75/28.25	1.092/1.112	G49	WR-G49	4 x .7 x 12.0 LG	4 x .7 x 16.0 LG
28.5	28.25/28.75	1.112/1.132	G49	WR-G49	4 x .7 x 12.0 LG	4 x .7 x 16.0 LG
30.0	29.75/30.25	1.171/1.191	G49	WR-G49	4 x .7 x 12.0 LG	4 x .7 x 16.0 LG
32.0	31.75/32.25	1.250/1.270	G49	WR-G49	4 x .7 x 12.0 LG	4 x .7 x 16.0 LG
38.1	37.85/38.35	1.490/1.510	G49	WR-G49	4 x .7 x 12.0 LG	4 x .7 x 20.0 LG
40.0	39.75/40.25	1.565/1.585	G49	WR-G49	4 x .7 x 12.0 LG	4 x .7 x 20.0 LG

**IMPORTANT: The diameter range does NOT represent a range of cut diameter adjustability for a given tool. Each tool is built to cut a specific hole diameter, with a limited micro-adjustment range. The diameter range includes sizes that are grouped here for the purpose of specifying common tool dimensions and specifications.*

To Order Contact: Exact Tooling / www.exacttooling.com / sales@exacttooling.com / 888-988-8820

Shefcut® blade options & cutting lead geometries

Carbide blades are available from stock, with or without TiN coating.

Shefcut® blades are manufactured from polished micrograin carbide, carefully selected for maximum life and performance. The blade is precision ground to exacting tolerances and has a very sharp, high-quality edge. An array of standard cutting lead geometries and rake angles are available to suit various material types and application requirements.

Carbide blades are available from stock, with or without TiN coating. Blades with other coatings are available upon request for better performance on certain materials.

Blades tipped with polycrystalline diamond (PCD) are of a standard design and made to order for top performance, enhanced productivity, and extended blade life on certain materials (e.g., high-silicon aluminum, composites, or abrasive materials) and for certain machining conditions (high cutting speeds or very long production runs).

Most standard blades are double-edged for extended blade life (see "Blade Replacement and Adjustment," page 36). PCD-tipped blades are single-edged.

To Order Contact: Exact Tooling / www.exacttooling.com / sales@exacttooling.com / 888-988-8820

Blade options

Refer to "Cutting Lead Geometries" on pages 26–29, and to the Machining Guide on pages 40–41, for general guidelines for selecting specific lead geometries and rake angles to suit the application. The charts are intended as a starting point; variables such as material type, speed and feed, cycle time, machining allowance, and finish requirement will influence the selection of the appropriate lead and rake.

NOTE: In order to avoid tool damage, the blade lead should match the lead that is ground on the guide pads and marked on the tool.

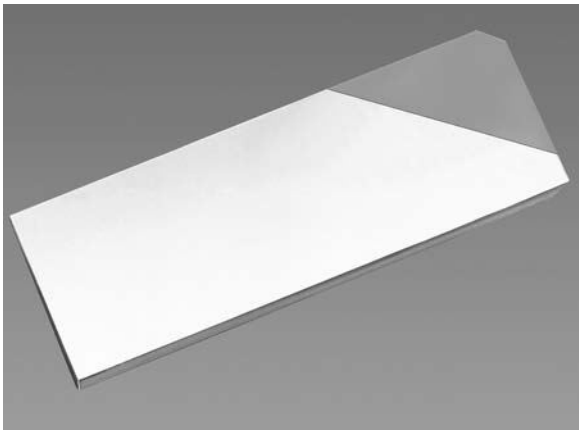

PCD-tipped blades are made to order for top performance, enhanced productivity, and extended blade life on certain materials.

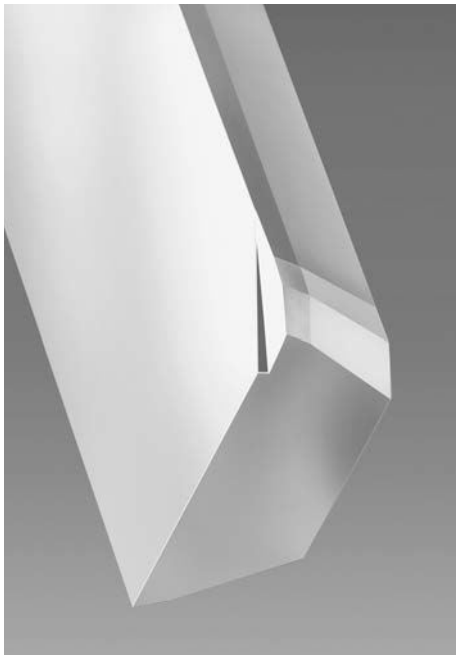

Blades with an optional chipbreaker are offered upon request for cutting materials that generate long, stringy chips.

To Order Contact: Exact Tooling / www.exacttooling.com / sales@exacttooling.com / 888-988-8820

Cutting lead geometries

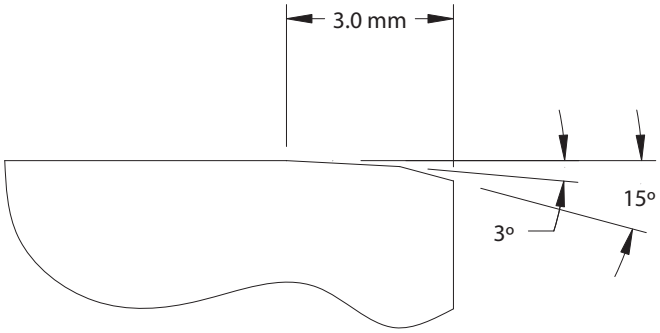

cutting lead C3.0

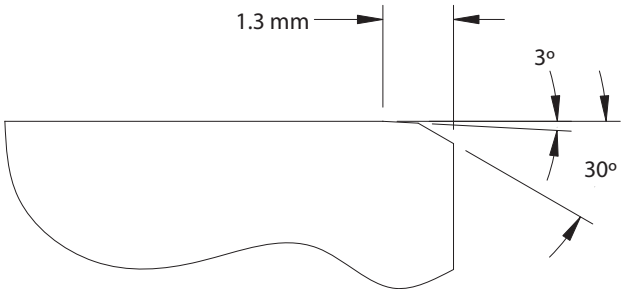

cutting lead C1.3

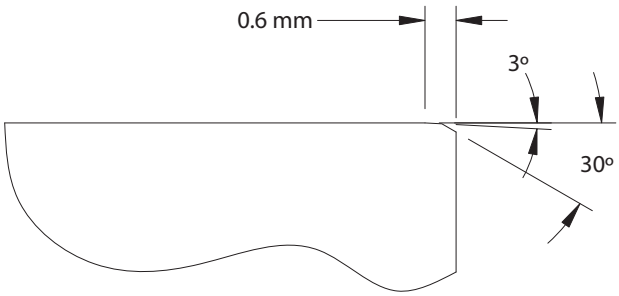

cutting lead C0.6

To Order Contact: Exact Tooling / www.exacttooling.com / sales@exacttooling.com / 888-988-8820

Cutting lead geometries

METRIC UNITS

STANDARD CUTTING LEAD GEOMETRY	SUGGESTED APPLICATIONS	FINISHES ATTAINABLE IN MICROMETERS (RA)	RECOMMENDED MACHINING ALLOWANCE ON DIAMETER		
			REAMER DIAMETER	RECOMMENDED RANGE	MAXIMUM*
C3.0	Through-bores- for improved surface finish using lower speeds and light cuts in cast iron, stainless steel, and nickel chrome steels	0.15 to 0.6	7.899 - 14.478	0.15 - 0.30	0.40
			14.503 and up	0.20 - 0.40	0.70
C1.3	Universal lead for through or blind bores- for higher cutting speeds, reaming into cut-off zones, aluminum and softer or nonferrous materials, thin-wall applications	0.2 to 0.9 (0.1 possible in aluminum)	7.899 - 14.478	0.15 - 0.30	0.50
			14.503 and up	0.20 - 0.40	0.80
C0.6	Blind bores- where C1.3 is too long	0.4 to 1.2 (0.1 possible in aluminum)	7.899 - 14.478	0.15 - 0.30	0.30
			14.503 and up	0.15 - 0.30	0.40

** Maximum should not be exceeded. Maximum for stainless steel is 0.15mm on diameter.*

INCH UNITS

STANDARD CUTTING LEAD GEOMETRY	SUGGESTED APPLICATIONS	FINISHES ATTAINABLE IN MICROINCHES (RA)	RECOMMENDED MACHINING ALLOWANCE ON DIAMETER		
			REAMER DIAMETER	RECOMMENDED RANGE	MAXIMUM*
C3.0	Through-bores- for improved surface finish using lower speeds and light cuts in cast iron, stainless steel, and nickel chrome steels	6 to 24	.311 - .570	.006 - .012	.016
			.571 and up	.008 - .016	.028
C1.3	Universal lead for through or blind bores- for higher cutting speeds, reaming into cut-off zones, aluminum and softer or nonferrous materials, thin-wall applications	8 to 36 (4 possible in aluminum)	.311 - .570	.006 - .012	.020
			.571 and up	.008 - .016	.031
C0.6	Blind bores- where C1.3 is too long	16 to 48 (4 possible in aluminum)	.311 - .570	.006 - .012	.012
			.571 and up	.006 - .012	.016

** Maximum should not be exceeded. Maximum for stainless steel is .006 in. on diameter.*

To Order Contact: Exact Tooling / www.exacttooling.com / sales@exacttooling.com / 888-988-8820

Cutting lead geometries

(greater stock removal)

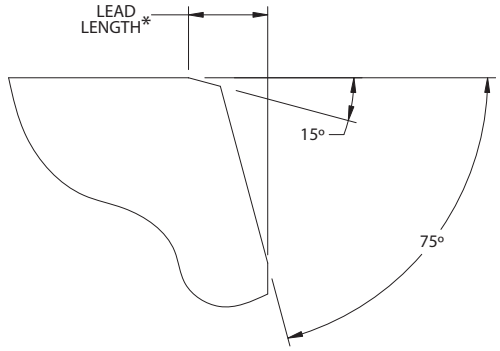

cutting lead GR

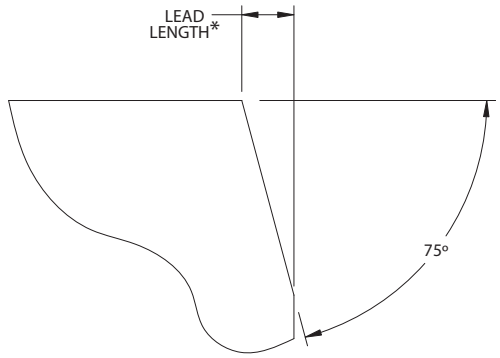

cutting lead GD

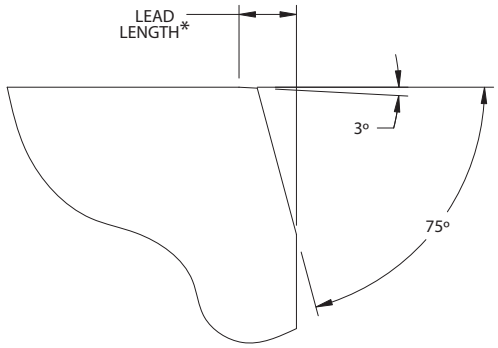

cutting lead GDR

**Length of cutting lead depends on size of blade as shown in chart below.*

CUTTING LEAD	LENGTH OF CUTTING LEAD									
	G0		G19		G29		G39		G49	
	mm	In	mm	In	mm	In	mm	In	mm	In.
GR	1.5	.059	1.7	.067	2.0	.078	2.2	.086	2.5	.098
GD	0.5	.020	0.7	.028	1.0	.039	1.2	.047	1.5	.059
GDR	1.0	.039	1.0	.039	1.3	.051	1.5	.059	1.6	.063

To Order Contact: Exact Tooling / www.exacttooling.com / sales@exacttooling.com / 888-988-8820

Cutting lead geometries

(greater stock removal)

METRIC UNITS

STANDARD CUTTING LEAD GEOMETRY	SUGGESTED APPLICATIONS	FINISHES ATTAINABLE IN MICROMETERS (RA)	RECOMMENDED MACHINING ALLOWANCE ON DIAMETER		
			REAMER DIAMETER	RECOMMENDED RANGE	MAXIMUM*
GR	For short chip materials (e.g., cast iron)	0.3 to 1.5	7.925 - 9.499	0.40 - 1.5	2.5
			9.500 - 14.492	0.50 - 2.5	4.0
			14.493 - 17.792	0.50 - 4.0	6.0
			17.793 - 22.491	0.50 - 5.0	7.0
			22.492 and up	0.50 - 6.0	8.0
GD	For machining aluminum at high speeds	0.3 to 1.5 (0.15 possible in aluminum)	7.925 - 9.499	0.40 - 1.5	2.5
			9.500 - 14.492	0.50 - 2.5	4.0
			14.493 - 17.792	0.50 - 4.0	6.0
			17.793 - 22.491	0.50 - 5.0	7.0
			22.492 and up	0.50 - 6.0	8.0
GDR	For producing high quality surface finishes in most materials	0.3 to 1.0 (0.15 possible in aluminum)	7.925 - 9.499	0.40 - 1.5	2.5
			9.500 - 14.492	0.50- 2.5	4.0
			14.493 - 17.792	0.50 - 4.0	6.0
			17.793 - 22.491	0.50 - 5.0	7.0
			22.492 and up	0.50 - 6.0	8.0

** Maximum should not be exceeded. Not recommended for steels.*

INCH UNITS

STANDARD CUTTING LEAD GEOMETRY	SUGGESTED APPLICATIONS	FINISHES ATTAINABLE IN MICROINCHES (RA)	RECOMMENDED MACHINING ALLOWANCE ON DIAMETER		
			REAMER DIAMETER	RECOMMENDED RANGE	MAXIMUM*
GR	For short chip materials (e.g., cast iron)	12 to 60	.312 - .373	.016 - .059	.098
			.374 - .570	.020 - .098	.157
			.571 - .700	.020 - .157	.236
			.701 - .885	.020 - .197	.276
			.886 and up	.020 - .236	.315
GD	For machining aluminum at high speeds	12 to 60 (6 possible in aluminum)	.312 - .373	.016 - .059	.098
			.374 - ..570	.020 - .098	.157
			.571 - .700	.020 - .157	.236
			.701 - .885	.020 - .197	.276
			.886 and up	.020 - .236	.315
GDR	For producing high quality surface finishes in most materials	12 to 40 (6 possible in aluminum)	.312 - .373	.016 - .059	.098
			.374 - .570	.020 - .098	.157
			.571 - .700	.020 - .157	.236
			.701 - .885	.020 - .197	.276
			.886 and up	.020 - .236	.315

** Maximum should not be exceeded. Not recommended for steels.*

NOTE: Special chamfer and radius leads are available upon request and designed to suit the application. Please complete the Application Data Sheet on page 43 and submit it along with a part print or detailed sketch.

To Order Contact: Exact Tooling / www.exacttooling.com / sales@exacttooling.com / 888-988-8820

Shefcut® tool holders

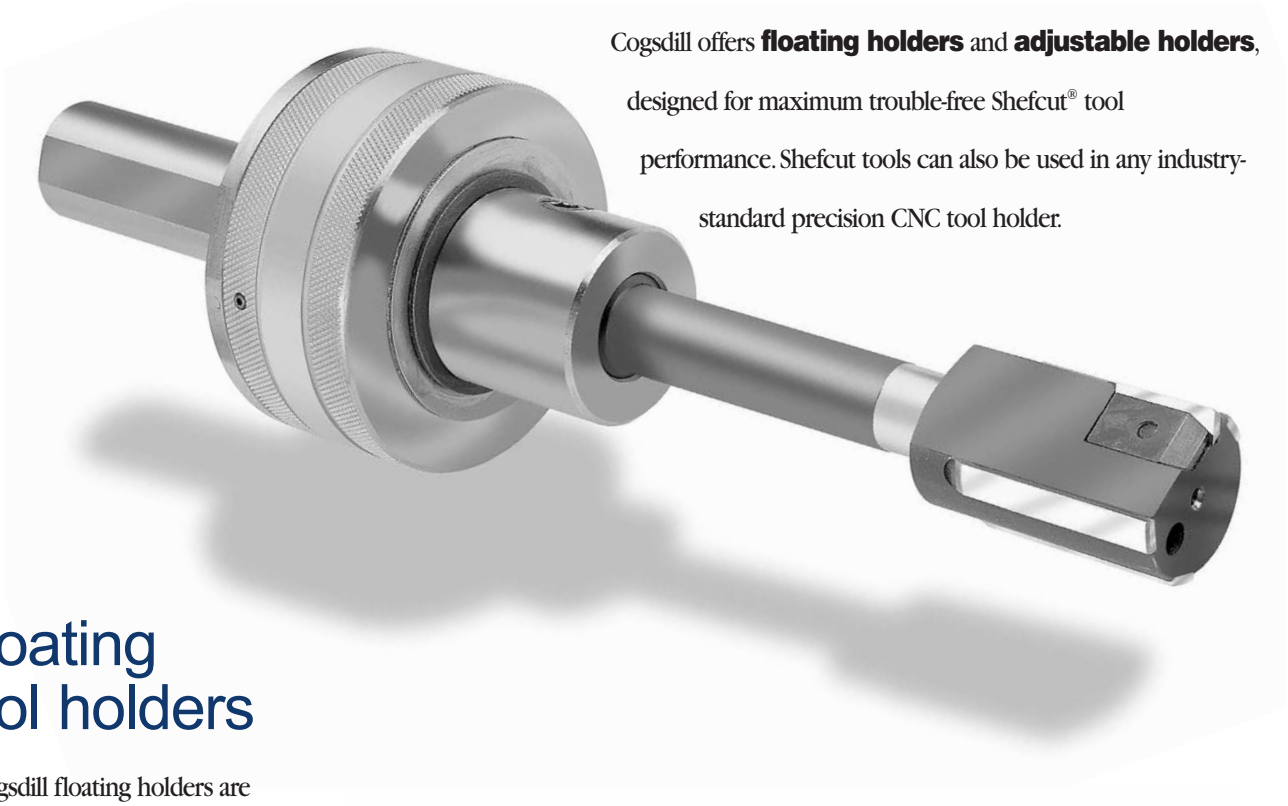

Cogsdill offers **floating holders** and **adjustable holders**, designed for maximum trouble-free Shefcut® tool performance. Shefcut tools can also be used in any industry-standard precision CNC tool holder.

Floating tool holders

Cogsdill floating holders are designed to compensate with radial and angular float for misalignment between workpiece, tool, and spindle. Our floating holder is designed primarily for turning-type applications where the tool is stationary, such as on automatic lathes and CNC turning machines. The holder corrects for misalignment between the prebore of the workpiece and the machine turret into which the tool is mounted.

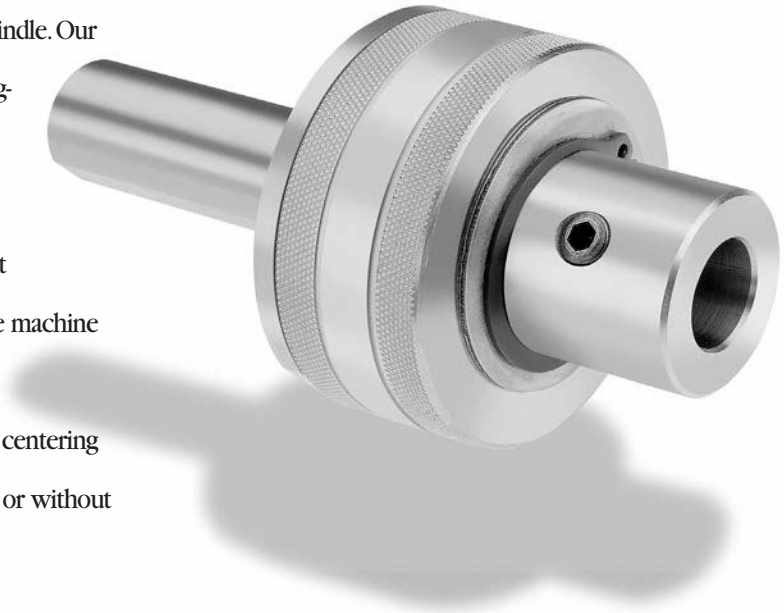

Our floating holder is self-centering, and the centering load is adjustable. The holder can be used with or without internal coolant.

To Order Contact: Exact Tooling / www.exacttooling.com / sales@exacttooling.com / 888-988-8820

Floating tool holders

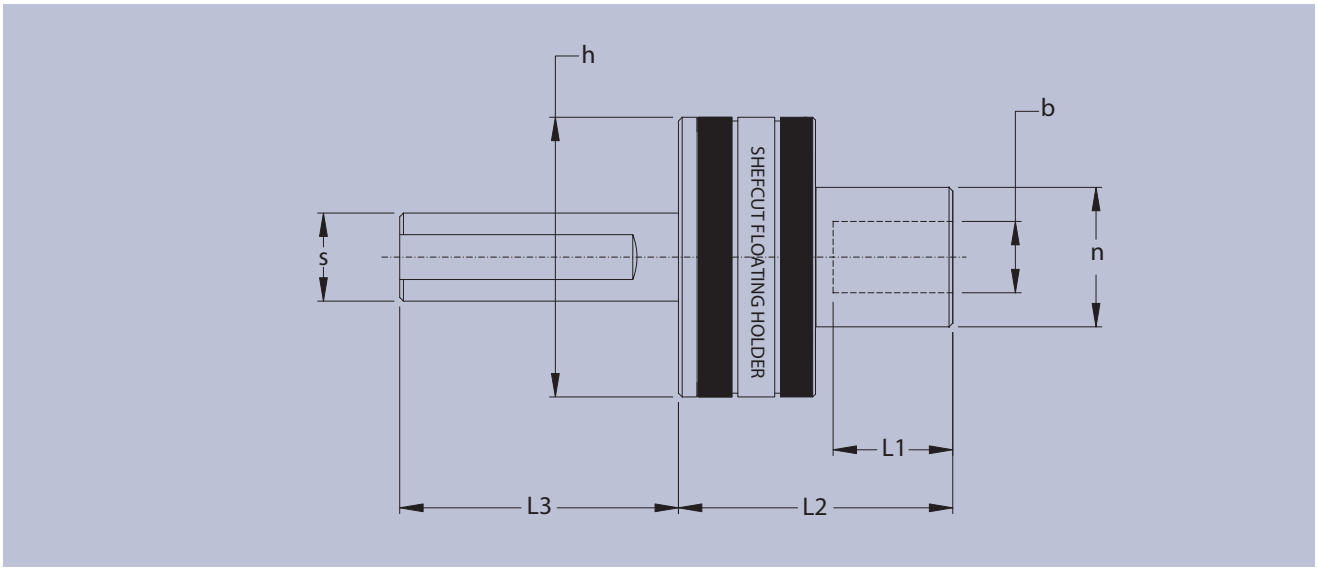

TOOL HOLDER	SHANK DIA (s)	BORE DIA (b)	BORE DEPTH (L1)	PROJECTION (L2)	SHANK LENGTH (L3)	BODY DIA (h)	NOSE DIA (n)
WR-FH-2025	25.00 mm	20.00 mm	50.00 mm	75.00 mm	76.00 mm	76.20 mm	38.00 mm
WR-FH-075010	1.000 inch	0.750 inch	1.969 inch	2.953 inch	2.992 inch	3.000 inch	1.496 inch

NOTE: ALL DIMENSIONS NOTED ARE NOMINAL SIZE.

To Order Contact: Exact Tooling / www.exacttooling.com / sales@exacttooling.com / 888-988-8820

Adjustable tool holders

Cogsdill offers special adjustable holders for Shefcut tools, available with virtually all types of machine spindle connections including HSK, CAT/ANSI and BT. The holders feature an adjustable flange that allows precise movements in both axial and radial directions. The reamer may be designed with an integral flange to connect to the holder flange, or with a straight shank that fits into a precision collet holder with adjustable elements. Concentricity of 3 microns (0.0001 in.) or less can be easily achieved. Recommended for boring holes to close tolerances and for length-to-diameter ratios greater than 4:1.

To Order Contact: Exact Tooling / www.exacttooling.com / sales@exacttooling.com / 888-988-8820

Easy-True™

A Shefcut design option called "Easy-True" features four cone-head torque screws located around the circumference of the tool body. Adjustment of the screws allows fast and easy elimination of cutting edge run-out. Will correct for tool run-out as much as 0.05 - 0.08mm (.002-.003 in.). Enables the user to guarantee concentricity when using Shefcut reamers in industry-standard side-lock holders. Suitable for standard tools with straight shanks.

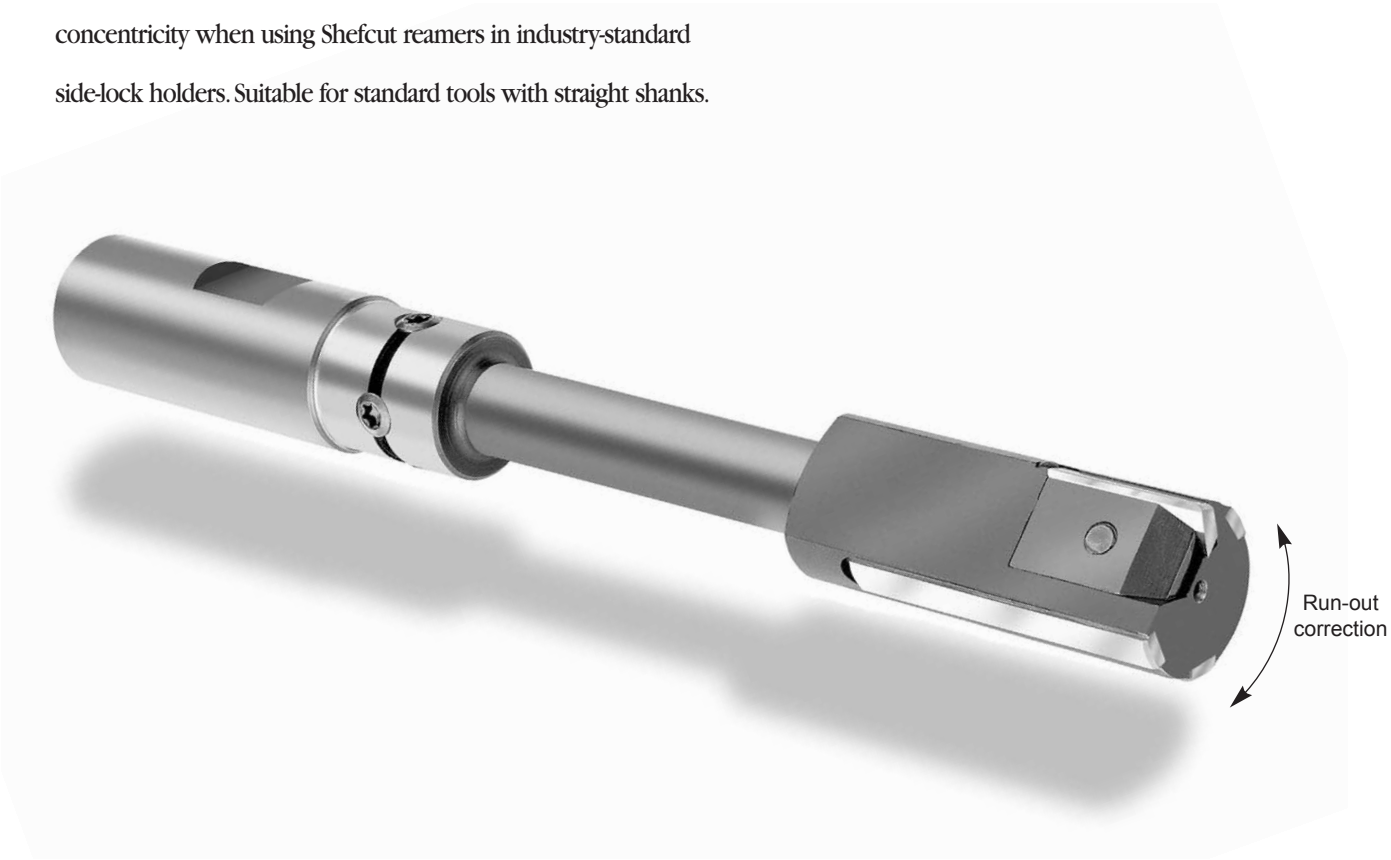

Shefcut "Easy-True" adjustment feature eliminates run-out.

To Order Contact: Exact Tooling / www.exacttooling.com / sales@exacttooling.com / 888-988-8820

Shefcut® setting fixtures

Cogsdill manufactures a comprehensive range of setting fixtures that hold Shefcut® tools securely for **fast, accurate, and reliable tool settings**. Setting time is reduced for shortest possible down time; chance of blade breakage is virtually eliminated; tool life is consistent and predictable.

The tool is placed between adjustable centers. Using the pad diameter as the reference point, one gage probe measures tool cut diameter and the other measures blade back taper. (See page 36, "Blade Replacement and Adjustment".)

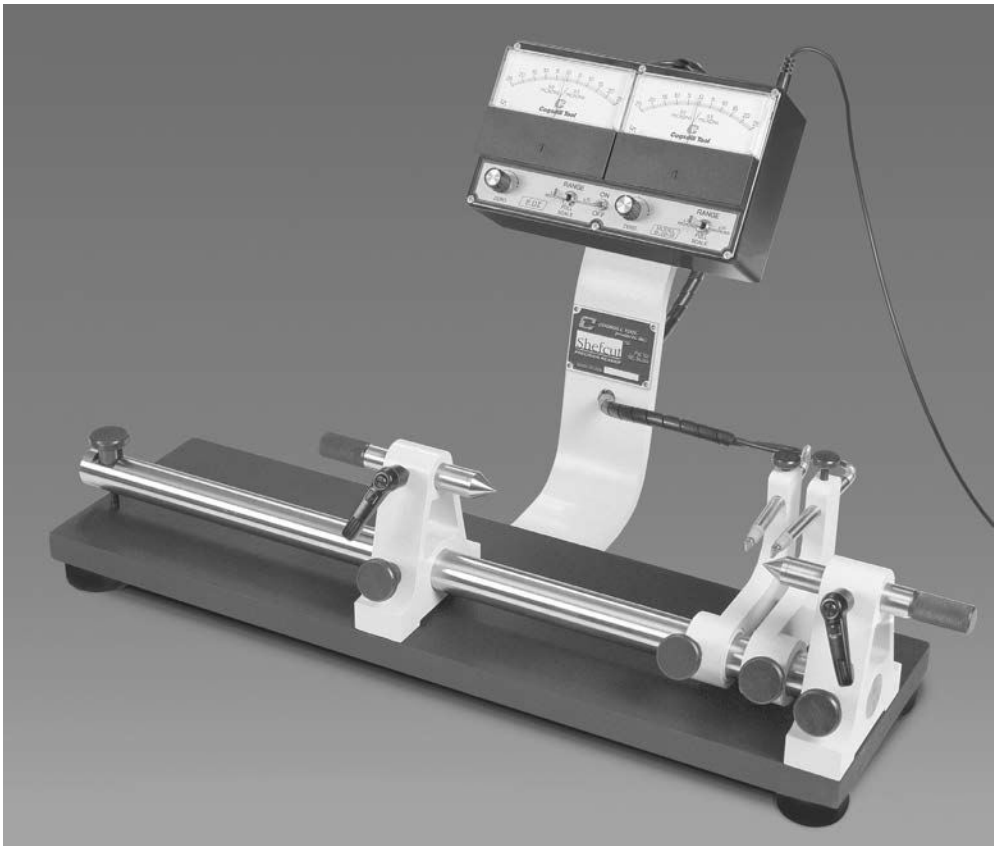

World Reamer® setting fixture with electronic indicators

Two basic designs are offered, in both inch and metric models.

The World Reamer® fixture is compact and easy to use for tools that fall within the parameters of our World Reamer® program as shown on pages 22-23. (Maximum tool length: 432mm, or 17.00 in.; maximum tool diameter: 89mm, or 3.50 in.) The World Reamer fixture is available with manual dial indicators (resolution up to .0013mm, or .000050 in.), or with electronic indicators for extreme accuracy (resolution up to .0005mm, or .000020 in.).

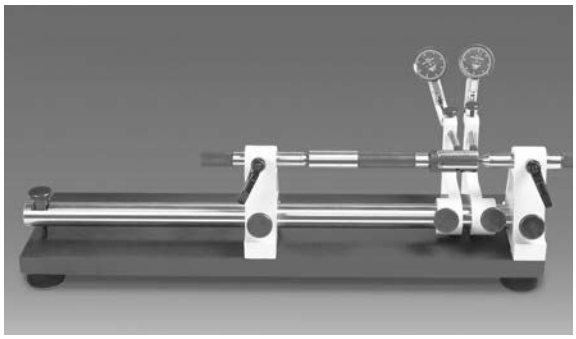

World Reamer® setting fixture with dial indicators

To Order Contact: Exact Tooling / www.exacttooling.com / sales@exacttooling.com / 888-988-8820

The **All-Purpose fixture** will accommodate longer tools, tools with larger cut diameters, or multiple steps. Maximum tool length: 363mm (14.3 in.) with standard components; can be equipped to accommodate longer tools on request. Maximum tool diameter: 109mm (4.3 in.). It comes equipped with electronic indicators. Special models can also be designed and built with three probes (suitable for taper reamers), with special electronics, or to accommodate other special requirements including longer length tools.

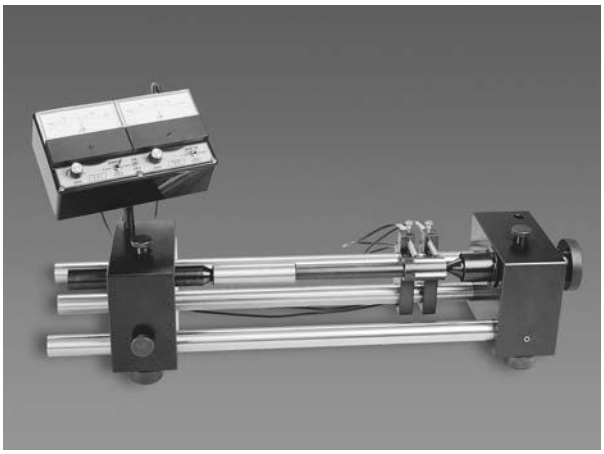

All-purpose setting fixture with electronic indicators

World Reamer® Setting fixtures

MODEL NO.	DESCRIPTION
TL-1096-1	Inch with electronic indicators
TL-1096-2	Inch with dial indicators
TL-1096-3	Metric with electronic indicators
TL-1096-2M	Metric with dial indicators

All Purpose Setting fixtures

MODEL NO.	DESCRIPTION
CSF-B29	Inch with electronic indicators
CSF-B29M	Metric with electronic indicators

To Order Contact: Exact Tooling / www.exacttooling.com / sales@exacttooling.com / 888-988-8820

Shefcut® blade replacement and adjustment

Blade replacement

1. Loosen clamp screw(s) with hex wrench and remove blade.
2. Clean blade slot. Inspect clamping plate, clamping screw(s), adjusting screws, and seating faces. Replace worn or damaged parts as necessary.
3. Most Shefcut® blades have two cutting edges (see "Blade Options and Cutting Geometries," page 24). For an unused edge, rotate blade end for end.
4. If installing a new blade, make sure that cutting lead on blade to be installed matches cutting lead ground on pads (and marked on tool).
5. Loosen adjusting screws by one-quarter turn. Insert blade in slot firmly against blade stop pin.
6. Turn clamping screw(s) clockwise until snug, but **not tight**, in order to allow blade movement during setting.
7. Adjust blade as described.
8. Secure blade by tightening clamp screw(s).

Blade adjustment

Shefcut tools are micro-adjustable within a limited range. This feature allows the tool to be set to an effective cutting diameter that the tool will produce accurately and consistently.

There are two **blade setting parameters:**

1. **Cut diameter**, defined as the distance from the apex of the blade (i.e., intersection of the two cutting lead angles) to the opposite guide pad.
2. **Back taper**, defined as the distance from the back of the blade to opposite guide pad. The back taper provides relief for the blade in the bore, and ensures that cutting is done from apex of lead intersection to front of blade, so that the tool acts as a single-point cutting tool.

There are several **methods for blade adjustment**:

- A **Cogsdill setting fixture** is the ideal method for highly efficient, consistently accurate tool settings, especially in high production applications (see "Setting Fixtures," page 34). Blade damage is minimized by use of the setting fixture. The tool is mounted securely between centers. As adjustments are made to the blade, readings are taken with probes and displayed on dial or electronic indicators.
- Alternative methods include:
  1. Bench centers mounted on a surface plate.
  2. Dial indicators; using a micrometer (preferably a pressure micrometer).

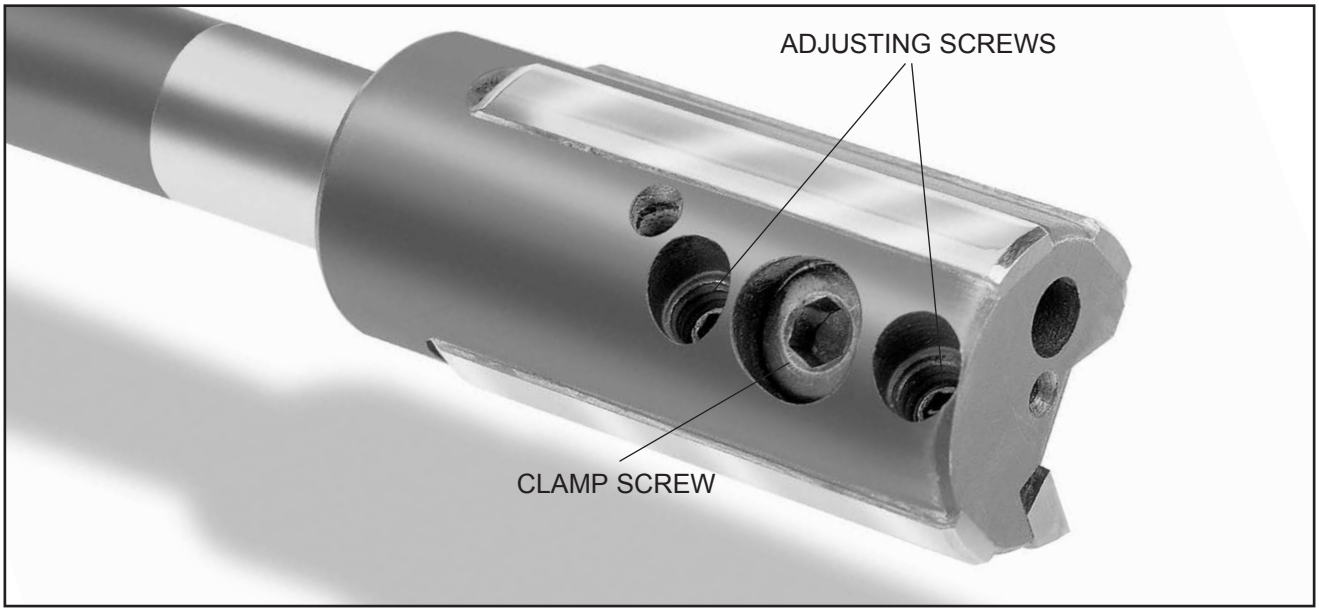

To Order Contact: Exact Tooling / www.exacttooling.com / sales@exacttooling.com / 888-988-8820

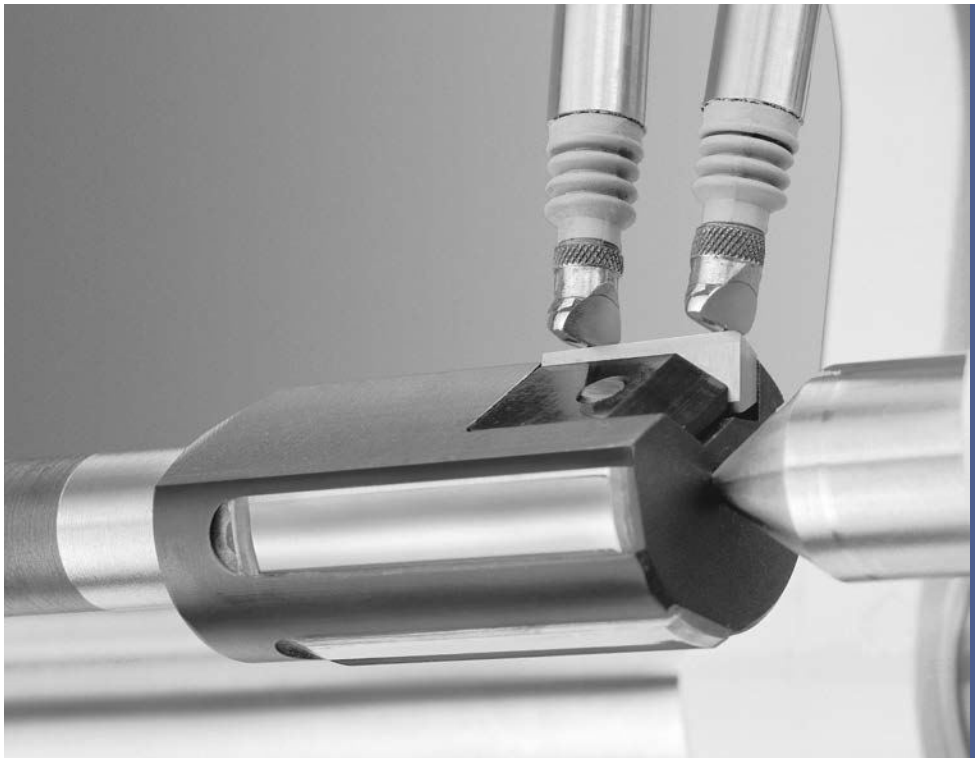

Two blade setting parameters:

1. **Cut diameter**, defined as the distance from the apex of the blade to the opposite guide pad.
2. **Back taper**, defined as the distance from the back of the blade to the opposite guide pad.

Using a Cogsdill setting fixture:

1. Identify difference in size between **guide pad diameter** and **minimum cut diameter** (also known as the "security zone," because it must be maintained in order to avoid tool damage).
2. Mount tool between centers.
3. Position front probe about 1mm (.039 in.) behind guide pad lead, with minimum pressure to avoid damaging blade edge.
4. Position rear probe at back of blade at the point furthest from cutting lead.
5. Set indicators on "zero," using guide pad diameter as the reference point.
6. Using front adjusting screw, rotate, adjust, and check reading until front of blade is higher than guide pads by the amount of the security zone, or approximately .008-.013mm (.0003-.0005 in.) above pad diameter. This will set the blade **cut diameter**.
7. Using rear adjusting screw, set rear of blade flush with pad diameter, or as much as .013-.020mm (.0005-.0008 in.) below pad diameter. This will set blade **back taper**.

Using a micrometer:

- A pressure micrometer is desirable, to ensure accurate setting and to reduce the possibility of chipping the blade.
- Blade edge should rest on anvil of micrometer while micrometer spindle is rocked gently over pad. To avoid blade damage, do not allow micrometer to move across blade edge.

To Order Contact: Exact Tooling / www.exacttooling.com / sales@exacttooling.com / 888-988-8820

Shefcut® operating requirements

Coolant

Coolant usage and selection is a critically important factor in maximizing Shefcut tool performance. As a general rule, Shefcut tools should **not** be run dry. A flood of clean coolant should be directed along the blade for lubrication and clearing of chips (swarf). (NOTE: Special Shefcut dry-cutting tools, and tools for spray-mist applications, are designed and built to order. Contact Cogsdill to discuss your application.)

We strongly recommend using a coolant with good lubricity, especially when machining nonferrous materials. Refer to the Coolant Selection and Coolant Flow Rate charts on this page for guidance in selecting the appropriate coolant for your material type.

Internal coolant is available for both through-bore and blind-bore applications (see "Internal Coolant Options," above). Internal coolant is recommended where the following conditions exist:

1. When machining blind bores where the depth of the bore is more than twice the diameter.
2. Where guide bushings or fixtures are used, or in applications where chip clearance problems are likely to occur.
3. When machining at high cutting speeds.
4. When machining long through-bores.

Internal coolant options

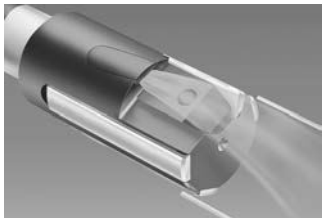

For **through-hole** tools with internal coolant, the coolant flows through the center of the tool and exits above the blade and pads, flushing chips out of the bore ahead of the tool.

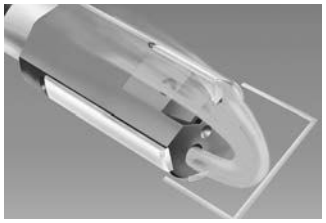

For **blind-bore** tools with internal coolant, the coolant exits at the end of the cutting head, flushing the chips back and out of the entrance of the blind bore.

COOLANT SELECTION	
MATERIAL TYPE	COOLANT RECOMMENDATION
Steel	Soluble 12%
Nickel chrome steel	Soluble 12%
Stainless steel	Soluble 12-14%
Cast iron	Soluble/Synthetic
Aluminum	Soluble 12-14%
Zinc alloys	Soluble 12%
Copper	Soluble 10-12%
Brass	Soluble 10-12%

INTERNAL COOLANT FLOW RATE					
REAMER DIAMETER		PRESSURE		VOLUME	
mm	In.	bar	psi	Liters/min	Gal/min
6-20	.236-.787	6-20	87-290	6-20	1.5-5.3
>20	>.787	3-10	44-145	20-100	5.3-26.4

To Order Contact: Exact Tooling / www.exacttooling.com / sales@exacttooling.com / 888-988-8820

Machining allowance

The bore size and finish prior to reaming must allow sufficient depth of cut for the reamer to remove all tool marks from the pre-machined hole. Refer to the charts on pages 26–29 for recommended machining allowances when using standard cutting leads.

NOTE: A maximum allowance of 0.15mm (.006 in.) on diameter is recommended when machining stainless steel.

Alignment

Shefcut reaming or boring requires accurate alignment of machine spindle to workpiece. Misalignment will reduce tool performance and bore quality, and may result in blade damage.

In Shefcut reaming applications, a floating holder may correct misalignment problems. Precision boring operations performed with a Shefcut tool may require the use of an adjustable holder (see "Tool Holders," page 30).

Power feed

Power feed is essential for consistent cutting pressure on the Shefcut tool. Hand-feeding the tool could result in poor tool performance and probable tool damage.

Lathe applications

Position the blade in the "up" position when using a Shefcut reamer on a lathe or in any application where the tool is held stationary in the horizontal position while the workpiece rotates. Use of a floating holder will correct any turret indexing errors.

To Order Contact: Exact Tooling / www.exacttooling.com / sales@exacttooling.com / 888-988-8820

Machining Guide for Shefcut® reaming applications

The information below is intended as a **starting point** for selecting the spindle speed and feed rate that will produce optimum results in Shefcut® precision reaming applications, when factors such as material type, blade lead, blade rake, and coolant are taken into consideration. The wide range in the recommendations reflects the fact that each application is unique and is influenced by these and other variables, such as the type of machine on which the tool is run, the manner in which the tool is held in the spindle, etc.

MATERIAL (TENSILE STRENGTH)	COOLANT STYLE AND BLADE LEAD							RADIAL RAKE ON BLADE	
	External Flood Coolant	Internal Coolant							
	C0.6, C1.3 & C3.0	C3.0	C1.3	C0.6	GR	GD	GDR		
	Cutting Speed (m/min) Feed (mm/rev)	Cutting Speed (m/min) Feed Rate (mm/rev)						Preferred	Option
Steel (<400 Mpa)	12-50 0.05 - 0.4	25-100 0.05-0.4			Not Recommended			12°	6°
Steel (400-750 Mpa)	8 - 35 0.05 - 0.4	25-100 0.05-0.4			Not Recommended			12°	6°
Steel (>750 Mpa)		25-80 0.05-0.4			Not Recommended			12°	6°
Nickel Chrome Steel		15-60 0.05-0.3			Not Recommended			12°	6°
Stainless Steel	5-16 0.05 - 0.3	8-40 0.05-0.3			Not Recommended			12°	6°
Grey Cast Iron	20-50 0.1 - 0.4	20-80 0.05-0.4	30-110 0.05-0.4					0°	6°
Nodular Cast Iron	20-50 0.1 - 0.3	20-90 0.05-0.3						12°	6°
Aluminum	20-70 0.05 - 0.4	Not Recommended	50-400 0.03-0.3			100-1200 0.05-0.15		12°	0°
Aluminum with high Silicon	20-70 0.05 - 0.4	Not Recommended	50-200 0.05-0.3		80-320 0.03-0.1			12°	6°
Zinc Alloy	20-70 0.05 - 0.4	Not Recommended	50-150 0.05-0.3		80-800 0.05-0.15			12°	0°
Brass - short chipping	10-50 0.05 - 0.4	25-80 0.05-0.4	25-150 0.03-0.4					0°	6°
Brass - long chipping	8-25 0.05 - 0.3	20-50 0.1-0.4	20-100 0.05-0.4					12°	6°
Copper - hard	10-30 0.05 - 0.4	15-60 0.1-0.4	20-100 0.03-0.4					0°	6°
Copper - soft		15-60 0.1-0.3	20-60 0.05-0.3		30-100 0.03-0.15			12°	6°
Phosphor Bronze	12-50 0.05 - 0.4	25-80 0.05-0.4	30-100 0.03-0.4					6°	12°

To Order Contact: Exact Tooling / www.exacttooling.com / sales@exacttooling.com / 888-988-8820

In general, you will find that the following guidelines will hold true:

1. Power feed should always be used when running a Shefcut tool.
2. Start at the middle of the recommended speed range, and at the lower side of the recommended feed range, for Shefcut precision reaming applications. Then adjust both rates as necessary to achieve optimum results and production rates.
3. Shefcut precision boring tools are often run at higher speeds and lower feeds than shown below.
4. Tools with coated blades can be operated at higher speeds than shown.
5. Run the tool at reduced speeds when through-tool coolant feed is not available.

INCH UNITS

MATERIAL (TENSILE STRENGTH)	COOLANT STYLE AND BLADE LEAD							RADIAL RAKE ON BLADE	
	External Flood Coolant	Internal Coolant							
	C0.6, C1.3 & C3.0	C3.0	C1.3	C0.6	GR	GD	GDR		
	Cutting Speed (s.f.m) Feed (in/rev)	Cutting Speed (s.f.m) Feed Rate (in/rev)						Preferred	Option
Steel - (<57k psi)	40-170 0.002 - 0.016	80-330 0.002-0.016			Not Recommended			12°	6°
Steel - (57k to 107k psi)	30 - 120 0.002 - 0.016	80-330 0.002-0.016			Not Recommended			12°	6°
Steel - (>107k psi)		80-260 0.002-0.016			Not Recommended			12°	6°
Nickel Chrome Steel		50-200 0.002-0.012			Not Recommended			12°	6°
Stainless Steel	20-50 0.002 - 0.012	30-130 0.002-0.012			Not Recommended			12°	6°
Grey Cast Iron	70-170 0.004 - 0.016	70-260 0.002-0.016	100-360 0.002-0.016					0°	6°
Nodular Cast Iron	70-170 0.004 - 0.012	70-300 0.002-0.012						12°	6°
Aluminum	70-230 0.002 - 0.016	Not Recommended	160-1310 0.001-0.012			330-3940 0.002-0.006		12°	0°
Aluminum with high Silicon	70-230 0.002 - 0.016	Not Recommended	160-660 0.002-0.012		260-1050 0.001-0.004			12°	6°
Zinc Alloy	70-230 0.002 - 0.016	Not Recommended	160-490 0.002-0.012		260-2630 0.002-0.006			12°	0°
Brass - short chipping	30-170 0.002 - 0.016	80-260 0.002-0.016	80-490 0.001-0.016					0°	6°
Brass - long chipping	30-80 0.002 - 0.012	70-160 0.004-0.016	70-330 0.002-0.016					12°	6°
Copper - hard	30-100 0.002 - 0.016	50-200 0.004-0.016	70-330 0.001-0.016					0°	6°
Copper - soft		50-200 0.004-0.012	70-200 0.002-0.012		100-330 0.001-0.006			12°	6°
Phosphor Bronze	40-170 0.002 - 0.016	80-260 0.002-0.016	100-330 0.001-0.016					6°	12°

To Order Contact: Exact Tooling / www.exacttooling.com / sales@exacttooling.com / 888-988-8820

Shefcut® tool performance guide

The Shefcut® tool is capable of consistently producing straight, round, and accurately sized holes with fine surface finishes. There are, however, many application variables that can influence tool performance. Coolant, alignment, and blade adjustment are often the most critical factors. Other variables include spindle run-out, feeds and speeds, and blade edge quality. Trials and adjustments may be necessary in order to arrive at the correct operating parameters for your application.

These tips may enhance the performance of your Shefcut tool. Contact us for assistance.

TOOL PERFORMANCE GUIDE

BORE CONDITION	CORRECTIVE ACTIONS
Tapered bore 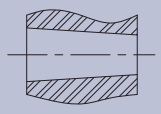	1. Check workpiece-to-spindle alignment. Correct alignment. Use floating holder if necessary in lathe applications. 2. Check tool runout. Guide pads should be within 0.005mm (.0002 in.) TIR. Adjust runout. Use an adjustable holder if necessary. 3. Reduce blade back taper. Minimum back taper is 0.007mm (.0003 in.). 4. Consider a witness bore for reaming applications.
Bore too large 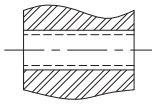	1. Check blade setting. Adjust to proper cut diameter. 2. Check workpiece-to-spindle alignment and tool runout.
Bore not round 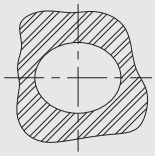	1. Tool too small for bore size being cut. Use correct size tool. 2. Reduce blade back taper if necessary. Normal blade back taper is 0.02mm (.0008 in.). 3. Ensure bore distortion is not being caused by part fixturing.
Conical entrance or exit 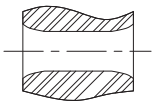	1. Check workpiece-to-spindle alignment and tool runout. 2. Check blade back taper (normal setting is 0.02mm (.0008 in.). 3. Reduce machine feed rate. 4. Tool may need repairing if excessive pad wear exists or if tool is bent. Pads should be inspected for material build-up; clean if required. Check straightness of tool.
Unsatisfactory surface finish 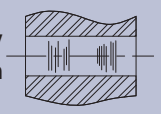	1. Machine feed rate may be too fast; reduce feed. 2. Vary cutting speed. Some experimentation may be required to establish the optimum cutting speed. 3. Check chip evacuation and chip form. Adjust coolant volume and pressure. Use chipbreaker blade if necessary. 4. Increase lubricity of coolant. 10:1 or richer mixture is normally required. 5. Check for clean, filtered coolant. 6. Check blade for wear or damage and replace if necessary.
Chattered bore 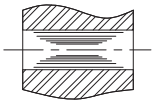	1. Check workpiece-to-spindle alignment and tool runout. 2. Check blade back taper and increase if necessary. Normal setting is 0.02mm (.0008 in.). 3. Increase coolant lubricity. Consider more stock allowance and/or increased feed rate. Change cutting rake.

To Order Contact: Exact Tooling / www.exacttooling.com / sales@exacttooling.com / 888-988-8820

COGSDILL TOOL
products, inc.

Application data sheet
Shefcut® Precision Reaming & Boring Solutions

CUSTOMER_____ DATE_____

ADDRESS_____

CITY_____ STATE_____ ZIP_____

CONTACT_____ TITLE_____

PHONE_____ FAX_____ E-MAIL_____

SALES AGENT/DISTRIBUTOR_____ SALESMAN_____

PART NUMBER AND DESCRIPTION_____

QUOTING QUANTITY_____ PRINTS INCLUDED YES ❑ NO ❑

B/P DRAWING NO._____

PRIMARY OBJECTIVE SIZE ❑ FINISH ❑ BORE LOCATION ❑ OTHER_____

EXACT BORE SIZE(S) REQUIRED/TOLERANCES _____ROUNDNESS TOLERANCE_____

STRAIGHTNESS TOLERANCE_____ SURFACE FINISH REQUIRED_____

MATERIAL TYPE & SPECIFICATIONS_____ HARDNESS OR TENSILE STRENGTH_____

PRE-REAMED DIAMETER(S)/MACHINING ALLOWANCE_____

LENGTH OF BORE(S)_____

AT TIME OF SHEFCUT OPERATION IS IT A **THROUGH** OR **BLIND** HOLE (Circle one)

IS BORE INTERRUPTED? YES ❑ NO ❑ (If yes, or if blind hole, include sketch of bore or part print)

MACHINE TYPE_____ HORIZONTAL OR VERTICAL?_____

IS A FIXED OR ROTATING BUSHING IN USE?_____

EXPECTED PART TO SPINDLE ALIGNMENT_____ MACHINE SET-UP: RIGID ❑ FLOATING ❑

FEED RANGE AVAILABLE_____ SPEED RANGE AVAILABLE_____ RPM

TYPE OF SHANK REQUIRED_____ MAXIMUM TOOL PROJECTION FROM SPINDLE_____

OAL (MAX.)_____ WORK LENGTH REQUIRED_____

IF THERE IS A WEIGHT LIMIT, PLEASE SPECIFY_____ USED IN A TOOL CHANGER? YES ❑ NO ❑

TYPE OF COOLANT LUBRICATION DESIRED:
INTERNAL THROUGH THE SPINDLE ❑ INTERNAL ROTARY GLAND ❑ EXTERNAL FLOOD ❑

NAME AND TYPE OF COOLANT AVAILABLE:
STRAIGHT CUTTING OIL_____
SOLUBLE OIL_____ DILUTION_____
SYNTHETIC_____ DILUTION_____

COOLANT PRESSURE_____ COOLANT FLOW_____

WILL THE TOOL BE: ROTATING ❑ STATIONARY ❑

PRODUCTION REQUIREMENT_____

_____

ADDITIONAL COMMENTS_____

_____

PLEASE PHOTOCOPY & COMPLETE THIS FORM & ENCLOSE WITH YOUR ORDER OR REQUEST FOR QUOTATION. THE DATA WILL BE USED TO ENSURE THAT THE CORRECT TOOL IS FURNISHED FOR YOUR PARTICULAR APPLICATION.

NOTE: For all values expressed, please indicate whether metric or inch.

Fax or mail to:
FAX (803) 438-5263
Cogsdill Tool Products, Inc.
P.O. Box 7007
Camden, SC 29021
ATTN: CUSTOMER SERVICE

IMPORTANT
PART PRINT OR DETAILED SKETCH MUST BE SUPPLIED.

To Order Contact: Exact Tooling / www.exacttooling.com / sales@exacttooling.com / 888-988-8820

Other hole-finishing solutions from Cogsdill

In addition to Shefcut™ precision reaming and boring tools, Cogsdill also offers burnishing tools. Like Shefcut tools, Cogsdill burnishing tools provide accurate size and fine finish. Burnishing, however, is a chipless metal displacement process that generates surfaces smoother and more wear-resistant than an abraded surface of the same profilometer reading.

Ask for our full catalog or view it on our Website at www.cogsdill.com.

Internal Roll-a-Finish® Tool

Adjustable burnishing tools from stock in popular hole sizes, and in various work lengths. Special designs available to suit the application.

To Order Contact: Exact Tooling / www.exacttooling.com / sales@exacttooling.com / 888-988-8820

COGSDILL TOOL PRODUCTS, INC.

toolmakers *since 1914*

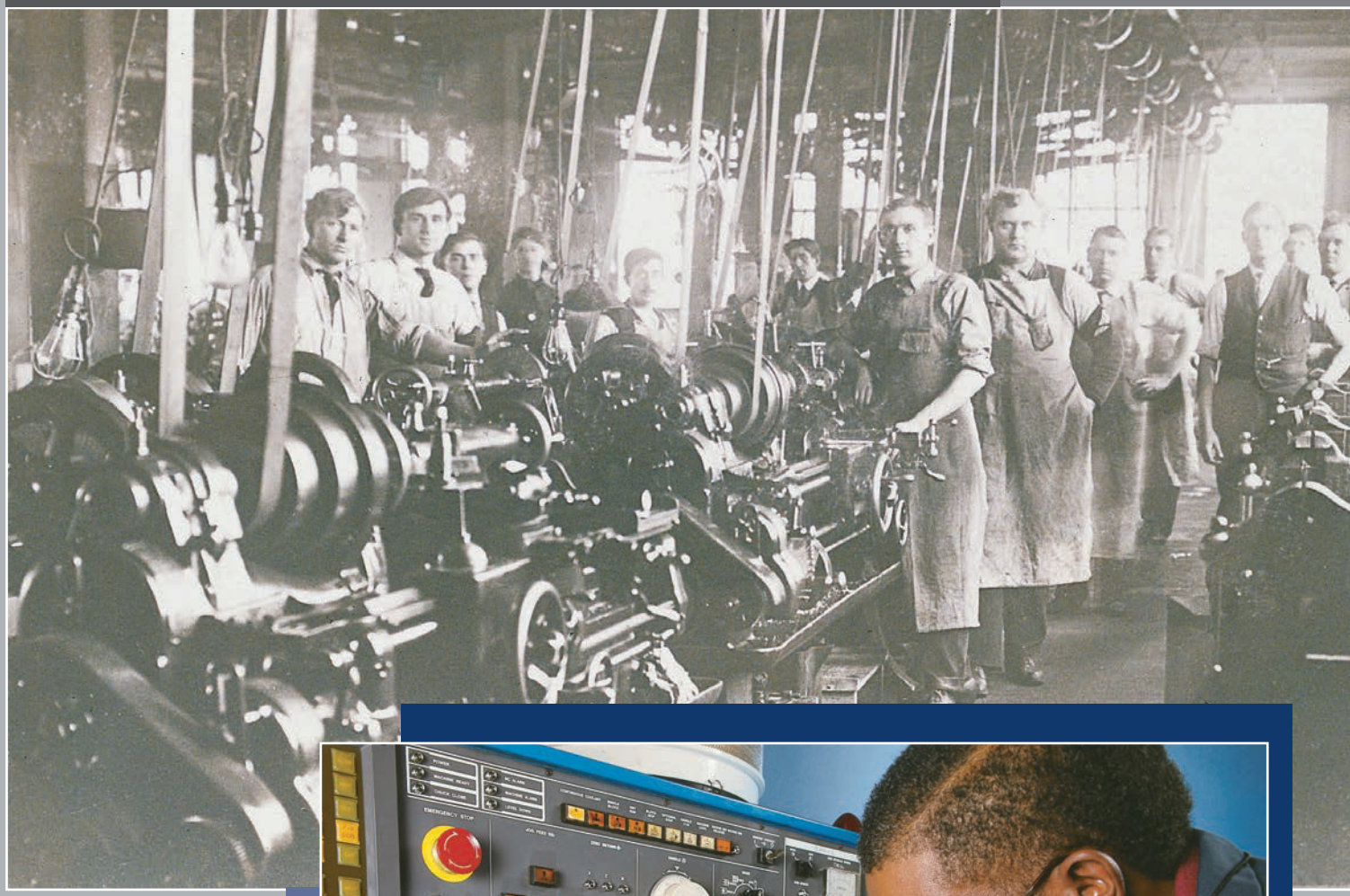

visit our web site at

www.cogsdill.com

To Order Contact: Exact Tooling / www.exacttooling.com / sales@exacttooling.com / 888-988-8820

OTHER PRODUCTS FROM COGSDILL TOOL PRODUCTS, INC.

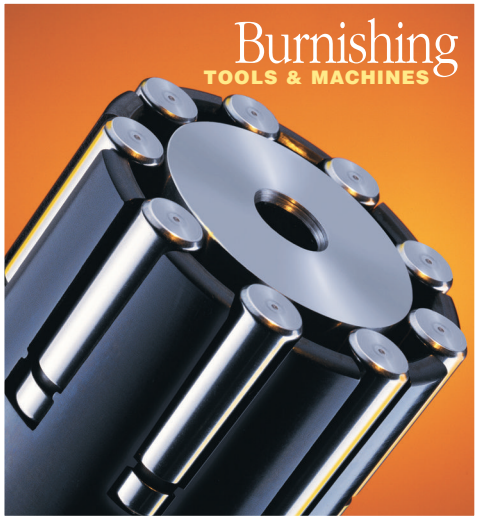

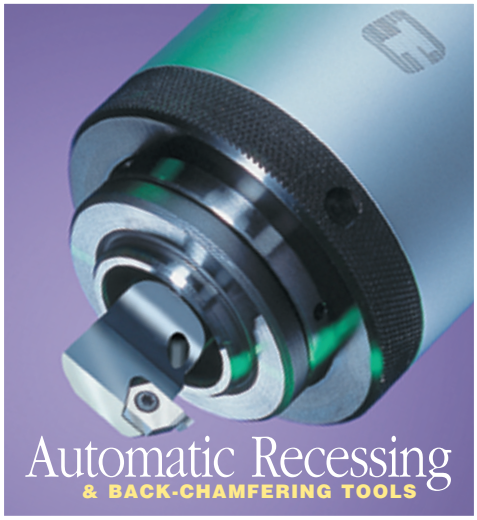

COGSDILL TOOL PRODUCTS, INC.
Mailing Address
P.O. Box 7007
Camden, SC USA 29021-7007
Ph. (803) 438-4000
Fax (803) 438-5263
www.cogsdill.com
cogsdill@cogsdill.com

Shipping Address
1001 Guion Drive
Lugoff, SC 29078

COGSDILL-NUNEATON LIMITED
St George's Way
Bermuda Industrial Estate
Nuneaton, Warwickshire, CV10 7JS, UK
Ph. +44 (0) 2476 383792
Fax +44 (0) 2476 344433
www.cogsdill.co.uk
sales@cogsdill.co.uk

FOR ADDITIONAL INFORMATION

Visit us online www.cogsdill.com

CATALOG NO. 600 U.S. 05-15

© COPYRIGHT 2015 COGSDILL TOOL PRODUCTS, INC.