To Order Contact: Exact Tooling / www.exacttooling.com / sales@exacttooling.com / 888-988-8820

FORKARDT

"The Original"

Tork-Lok

- Arbors
- Collets
- Fixtures

WORKHOLDING SOLUTIONS WORLDWIDE

Tork-Lok Arbors and Collets

TORK-LOK ARBORS AND COLLETS

The Tork-Lok arbor design answers the need for a completely versatile workholding device. Precision ground flats on collets and arbors improve long-term accuracy and torque transmission. Standardization of components permits interchangeability and combination possibilities. Locates straight or tapered holes on true center.

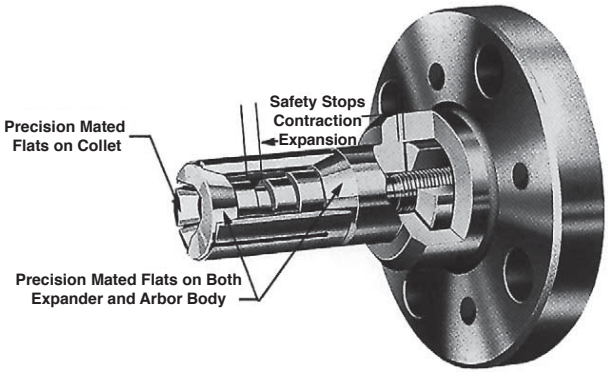

INSTALLATION AND OPERATING INSTRUCTIONS

Safety Stops
The expansion safety stop is fixed in all styles and requires no adjustment. The contraction or loading position safety stop is adjusted to suit the part being chucked.

Preload
All collets are manufactured to include a preload. Collets should not be adjusted below the range minimum for that collet. Preloads are .008 average on sizes from .500-.874 and .015 from .875-4.467.

Special Work Stop Consideration
Combination Work Stop and Retaining Sleeve: Restrictor Type Work Stops are necessary for parts whose gripping length is shorter than the collet. Since the Tork-Lok collet expands at both ends, a retaining sleeve is needed to prevent the free end of the collet from over expanding; a Restrictor Expander is used to reduce the expansion safety stop, preventing collet breakage (in case arbor is operated without a part in position).

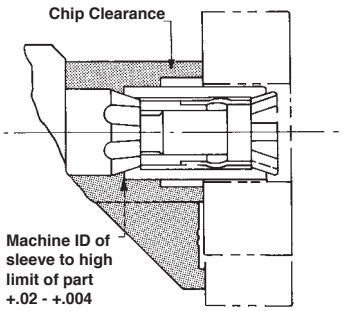

NOTES:
- All Tork-Lok arbor applications require a part stop
- If Restrictor Type Stop is used, a special Restrictor Expander is required
- Contact us at 1-800-228-BUCK for more information

DRAWBAR MODEL

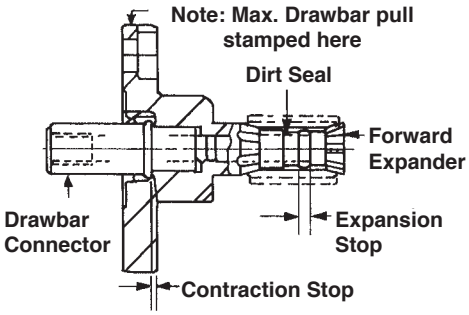

AIR-OPERATED MODEL

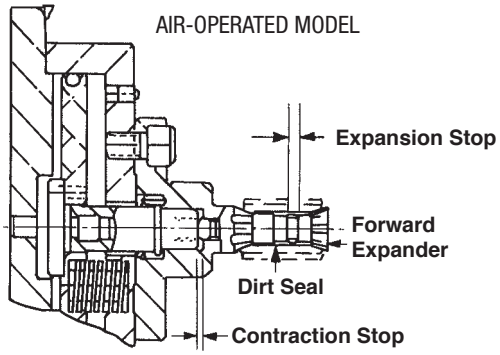

DRAWBAR MODEL

Drawbar should be in forward or push position. Adjust forward expander with Allen wrench until part is a slip fit on the collet. Collet flats both ends must mate.

Collet Changing
Drawbar should be in forward positions. Using Allen wrench, remove forward expander. Collet and rubber sleeve can then be removed. Wash parts in clean solvent. Lightly grease expander flats in contact. Install forward expander. Adjust according to instructions outlined above.

AIR-OPERATED MODEL

Air pressure on the cylinder should be at 70 psi. Adjust forward expander with Allen wrench until part is slip fit on the collet. Collet flats on both ends must mate.

Collet Changing
With air pressure at 70 psi, follow instructions listed in Drawbar Model.

To Interchange Assemblies
Apply 70 psi, remove mounting screws, turn arbor assembly counterclockwise until drawbar disengages from piston assembly.

To mount assembly, apply 70 psi. Be sure threads on drawbar are clean and oiled. Turn arbor assembly clockwise until face contacts cylinder. Back off to align tapped holes in cylinder. Insert screws and adjust according to instructions outlined above.

Arbor Applications

TYPICAL APPLICATIONS FOR ARBORS

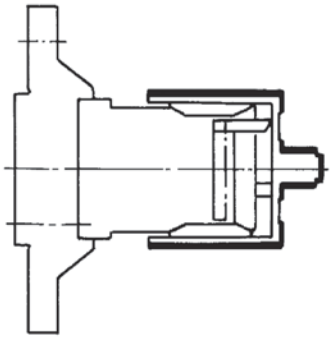

PISTON

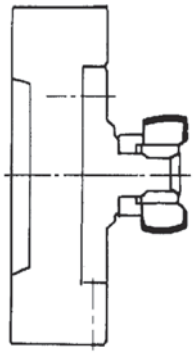

BALL JOINT

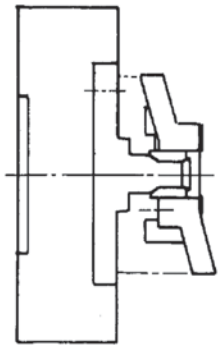

COMPRESSION PLATE

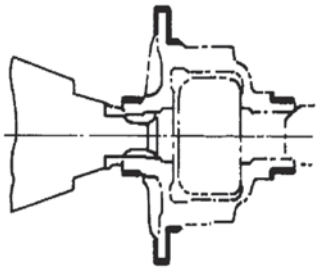

DIFF. CARRIER

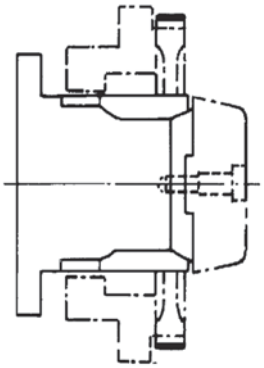

GEAR BLANK

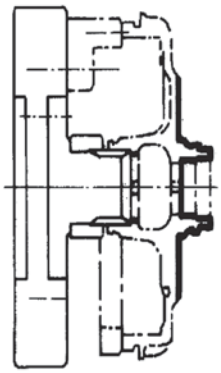

FRONT BRAKE DRUM

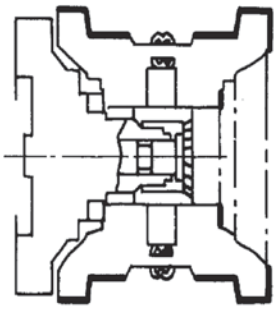

TRACK ROTOR

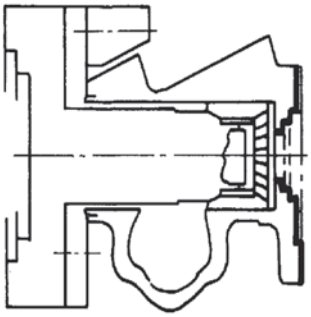

PUMP HOUSING

Special arbor combinations are available upon request. Please contact us at 1-800-228-BUCK for more information.

Tork-Lok Drawbar Models

Long Series Arbors

FEATURES AND BENEFITS:

- Answers your need for versatility
- Precision-ground flats improve accuracy
- Standardization permits interchangeability
- Locates straight or tapered holes on true center
- Requires a part stop

SHIPS COMPLETE WITH:

- Flange body
- Connector
- Expander
- Collet sold separately; see pages 40 & 41

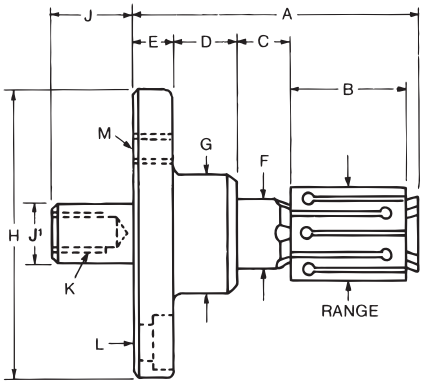

LONG SERIES

Measurements in inches unless otherwise indicated.

Part #	Range	A	B	C	D	E	F	G	H	J-J1	K	L	M
AC 2110	.500-.655 10 Collets	2.49	0.88	0.39	0.66	0.50	0.4702 0.4692	1.25	3.3755 3.3750	0.750 0.562	3/8 – 24	For (4) 3/8 S.H.S on 2.50 B.C.	For (4) 5/16 – 24 on 2.375 BC
AC 2210	.593-.780 12 Collets	2.69	1.06	0.41	0.66	0.50	0.5796 0.5786	1.25	3.3755 3.3750	0.750 0.562	3/8 – 24	For (4) 3/8 S.H.S on 2.50 B.C.	
AC 2310	.718-.999 18 Collets	2.96	1.25	0.49	0.66	0.50	0.7046 0.7036	1.25	3.3755 3.3750	0.750 0.562	3/8 – 24	For (4) 3/8 S.H.S on 2.50 B.C.	
AC 2410	.875-1.249 12 Collets	3.58	1.44	0.56	0.90	0.56	0.8452 0.8442	1.75	4.1255 4.1250	1.220 0.750	1/2 – 20	For (4) 1/2 S.H.S on 3.12 B.C.	For (4) 3/8 – 24 on 2.875 BC
AC 2510	1.125-1.624 16 Collets	3.89	1.62	0.69	0.90	0.56	1.0796 1.0786	1.75	4.1255 4.1250	1.220 0.750	1/2 – 20	For (4) 1/2 S.H.S on 3.12 B.C.	
AC 2610	1.468-2.092 20 Collets	4.14	1.81	0.82	0.72	0.68	1.4077 1.4067	2.50	4.8755 4.8750	1.590 0.968	3/4 – 16	For (4) 1/2 S.H.S on 3.75 B.C.	For (4) 3/8 – 24 on 3.625 BC
AC 2710	1.937-2.843 29 Collets	4.46	2.00	1.00	0.66	0.68	1.8452 1.8442	2.50	4.8755 4.8750	1.590 0.968	3/4 – 16	For (4) 1/2 S.H.S on 3.75 B.C.	
AC 2810	2.563-3.593 33 Collets	4.83	2.25	1.12	0.66	0.68	2.4390 2.4385	3.00	5.5005 5.5000	1.590 0.968	3/4 – 16	For (4) 1/2 S.H.S on 4.50 B.C.	
AC 2910	3.312-4.467 37 Collets	4.97	2.50	1.11	0.56	0.68	3.1885 3.1880	3.62	5.5005 5.5000	1.590 0.068	3/4 – 16	For (4) 1/2 S.H.S on 4.50 B.C.	

Tork-Lok Metric Drawbar Models

Long Series Arbors

FEATURES AND BENEFITS:

- Bolt circle has versatile three-bolt pattern
- Tighter tolerance on size and parallelism for locator mounting
- Provisions for air sensing
- Precision-ground flats improve accuracy
- Standardization permits interchangeability
- Locates straight or tapered holes on true center
- Requires a part stop

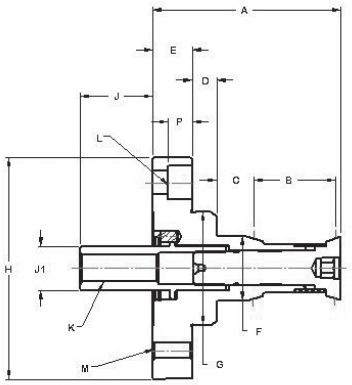

LONG SERIES

Dimensions denoted in millimeters unless otherwise specified.

Part #	RANGE	A	B	C	D	E	F	G	H	J-J1	K	L	M	P
AC-2110M	12.70 - 16.64 10 Collets	63.30	22.40	9.92	10.30	19.08	11.91	31.74	85.74 85.73	18.26 14.27	M10 X 1.5P	For (3) M10 X 1.5P SHCS ON 63.50 BC	For (3) M8 X 1.25P SHCS ON 60.33 BC	12.68
AC-2210M	15.06 -19.81 12 Collets	68.40	26.90	10.52	10.30	19.08	15.47	31.74	85.74 85.73	18.26 14.27	M10X1.5P			12.68
AC-2310M	18.24 - 25.38 18 Collets	75.30	31.80	12.42	10.30	19.08	18.26	31.74	85.74 85.73	18.26 14.27	M10 X 1.5P			12.68
AC-2410M	22.23 - 31.73 12 Collets	91.00	36.60	14.27	15.10	22.23	21.44	44.44	104.79 104.78	30.99 19.05	M12 X 1.75P	For (3) M12 X 1.75P SHCS ON 79.38 BC	For (3) M10 X 1.5P SHCS ON 73.03 BC	15.83
AC-2510M	28.58 - 41.25 16 Collets	98.70	41.10	17.47	15.10	22.23	27.79	44.44	104.79 104.78	30.99 19.05	M12 X 1.75P			15.83
AC-2610M	37.29 - 53.14 20 Collets	105.20	46.00	20.67	13.50	22.23	36.12	63.49	123.84 123.83	40.39 24.59	M16 X 2.0P			15.83
AC-2710M	49.20 - 72.21 29 Collets	113.20	50.80	25.47	11.90	22.23	47.22	63.49	123.84 123.83	40.39 24.59	M16 X 2.0P	For (3) M12 X 1.75P SHCS ON 95.25 BC	For (3) M10 X 1.5P SHCS ON 92.08 BC	15.83
AC-2810M	65.100 - 91.26 33 Collets	122.60	57.20	28.47	11.90	22.23	62.31	76.19	139.71 139.70	40.39 24.59	M16 X 2.0P			15.83
AC-2910M	84.13 - 113.46 37 Collets	126.30	63.50	27.87	9.50	22.23	80.98	92.06	139.71 139.70	40.39 24.59	M16 X 2.0P			15.83

Part #	Q	R
AC-2110M	15.00	M10 X 1.5P X 30.0 LG
AC-2210M	15.00	M10 X 1.5P X 30.0 LG
AC-2310M	15.00	M10 X 1.5P X 30.0 LG
AC-2410M	25.00	M12 X 1.75P X 50.0 LG
AC-2510M	25.00	M12 X 1.75P X 50.0 LG
AC-2610M	25.00	M16 X 2.0P X 50.0 LG
AC-2710M	25.00	M16 X 2.0P X 50.0 LG
AC-2810M	25.00	M16 X 2.0P X 50.0 LG
AC-2910M	25.00	M16 X 2.0P X 50.0 LG

SHIPS COMPLETE WITH:

- Flange body
- Connector
- Expander
- Collet sold separately; see pages 40 & 41

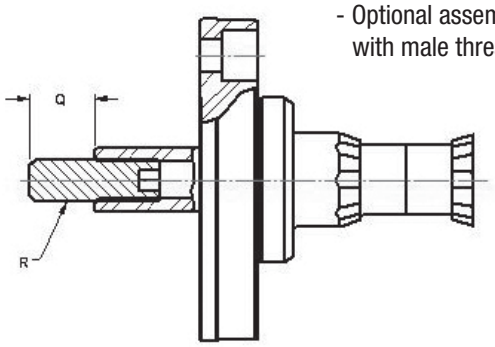

- Optional assembly method with male thread

Tork-Lok Drawbar Models

Short Series Arbors

FEATURES AND BENEFITS:

- Answers your need for versatility
- Precision-ground flats improve accuracy
- Standardization permits interchangeability
- Locates straight or tapered holes on true center
- Requires a part stop

SHIPS COMPLETE WITH:

- Flange body
- Connector
- Expander
- Collet sold separately; see pages 40 & 41

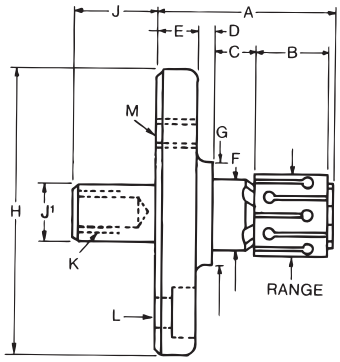

SHORT SERIES

Measurements in inches unless otherwise indicated.

Part #	Range	A	B	C	D	E	F	G	H	J-J1	K	L	M
AC 8100	.500-.655 15 Collets	1.81	0.590	0.42	0.25	0.50	0.4702 0.4692	0.88	3.3755 3.3750	0.781 0.562	3/8 – 24	For (4) 3/8 S.H.S on 2.50 BC	For (4) 5/16 – 24 on 2.375 BC
AC 8200	.593-.787 20 Collets	1.97	0.720	0.45	0.25	0.50	0.5796 0.5786	1.00	3.3755 3.3750	0.781 0.562	3/8 – 24	For (4) 3/8 S.H.S on 2.50 B.C.	
AC 8300	.718-1.000 28 Collets	2.15	0.840	0.51	0.25	0.50	0.7046 0.7036	1.12	3.3755 3.3750	0.781 0.562	3/8 – 24	For (4) 3/8 S.H.S on 2.50 B.C.	
AC 8400	.875-1.299 20 Collets	2.35	0.940	0.59	0.18	0.56	0.8452 0.8442	1.38	4.1255 4.1250	1.250 0.750	1/2 – 20	For (4) 1/2 S.H.S on 3.12 B.C.	For (4) 3/8 – 24 on 2.875 BC
AC 8500	1.125-1.624 24 Collets	2.59	1.125	0.65	0.18	0.56	1.0796 1.0786	1.56	4.1255 4.1250	1.250 0.750	1/2 – 20	For (4) 1/2 S.H.S on 3.12 B.C.	
AC 8600	1.468-2.104 30 Collets	2.93	1.220	0.83	0.12	0.68	1.4077 1.4067	1.88	4.8755 4.8750	1.625 0.968	3/4 – 16	For (4) 1/2 S.H.S on 3.75 B.C.	For (4) 3/8 – 24 on 3.625 BC
AC 8700	1.937-2.821 42 Collets	2.98	1.310	0.79	0.12	0.68	1.8452 1.8442	2.38	4.8755 4.8750	1.625 0.968	3/4 – 16	For (4) 1/2 S.H.S on 3.75 B.C.	

Tork-Lok Metric Drawbar Models

Short Series Arbors

FEATURES AND BENEFITS:

- Bolt circle has versatile three-bolt pattern
- Tighter tolerance on size and parallelism for locator mounting
- Provisions for air sensing
- Precision-ground flats improve accuracy
- Standardization permits interchangeability
- Locates straight or tapered holes on true center
- Requires a part stop

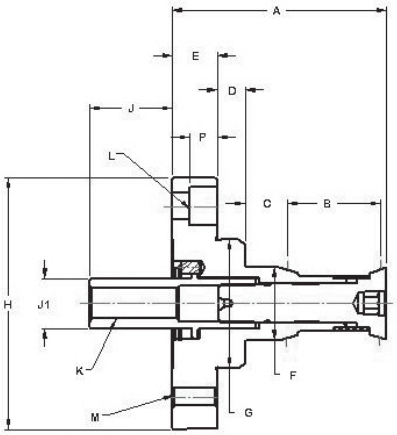

SHORT SERIES

Dimensions denoted in millimeters unless otherwise specified.

Part #	RANGE	A	B	C	E	F	H	J-J1	K	L	M	P
AC-8100M	12.70 - 16.64 15 Collets	46.00	15.00	10.72	19.08	11.94 11.92	85.74 85.73	19.84 14.27	M10 X 1.5P	For (3) M10 X 1.5P SHCS ON 63.50 BC	For (3) M8 X 1.25P SHCS ON 60.33 BC	13.04
AC-8200M	15.06 - 20.24 20 Collets	50.10	18.30	11.42	19.08	14.72 14.71	85.74 85.73	19.84 14.27	M10X1.5P			13.04
AC-8300M	18.24 - 25.40 28 Collets	54.50	21.30	12.92	19.08	17.89 17.88	85.74 85.73	19.84 14.27	M10 X 1.5P			13.04
AC-8400M	22.23 - 33.00 20 Collets	59.60	23.90	15.02	19.08	21.46 21.45	104.79 104.78	31.80 19.05	M12 X 1.75P	For (3) M12 X 1.75P SHCS ON 79.38 BC	For (3) M10 X 1.5P SHCS ON 73.03 BC	13.04
AC-8500M	28.58 - 41.71 24 Collets	65.70	28.60	16.42	19.08	27.42 27.41	104.79 104.78	31.75 19.05	M12 X 1.75P			13.04
AC-8600M	37.29 - 53.44 30 Collets	74.30	31.00	22.62	19.08	35.75 35.74	123.84 123.83	41.28 24.59	M16 X 2.0P	For (3) M12 X 1.75P SHCS ON 95.25 BC	For (3) M10 X 1.5P SHCS ON 92.08 BC	13.04
AC-8700M	649.20 - 71.65 42 Collets	75.50	33.30	21.52	19.08	46.86 46.85	123.84 123.83	41.28 24.59	M16 X 2.0P			13.04

Part #	Q	R
AC-8100M	15.00	M10 X 1.5P X 30.0 LG
AC-8200M	15.00	M10 X 1.5P X 40.0 LG
AC-8300M	15.00	M10 X 1.5P X 30.0 LG
AC-8400M	21.00	M12 X 1.75P X 40.0 LG
AC-8500M	21.00	M12 X 1.75P X 40.0 LG
AC-8600M	25.00	M16 X 2.0P X 50.0 LG
AC-8700M	25.00	M16 X 2.0P X 50.0 LG

SHIPS COMPLETE WITH:

- Flange body
- Connector
- Expander
- Collet sold separately; see pages 40 & 41

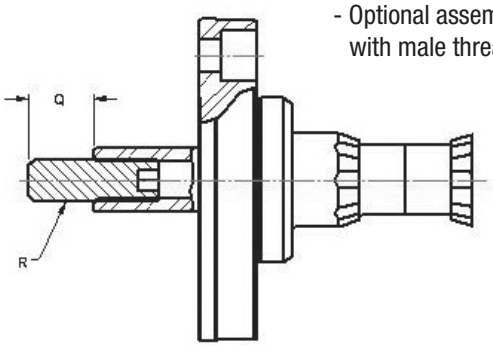

- Optional assembly method with male thread

Tork-Lok Long Series Collets

FEATURES AND BENEFITS:

- Precision ground flats
- Collets interchangeable on all arbors within specified range
- Accuracy of arbor not affected by indexing of collet shaft
- High-grade steels, precisely heat treated
- Silicone sealing of collet slots for special jobs is available on request for additional charge
- Collets in oversize (overlap) ranges are available – **see bold ranges**

Oversize collets AC107-110; 209-212 and 311-318 should be used only in light turning or grinding operations.

For use on AC1100 2110M, 2110, 5110			
Collet #	Range (mm)	Range (in)	Length
AC101	12.70-13.08	.500-.515	.88 in 22.35mm
AC102	13.11-13.46	.516-.530	
AC103	13.49-13.87	.531-.546	
AC104	13.89-14.25	.547-.561	
AC105	14.28-14.66	.562-.577	
AC106	14.68-15.03	.578-.592	
AC107	**15.06-15.44**	**.593-.608**	
AC108	**15.47-15.82**	**.609-.623**	
AC109	**15.85-16.23**	**.624-.639**	
AC110	**16.26-16.64**	**.640-.655**	

For use on AC1200, 2210M, 2210, 5210			
Collet #	Range (mm)	Range (in)	Length
AC201	15.06-15.44	.593-.608	1.06 in 26.92 mm
AC202	15.47-15.85	.609-.624	
AC203	15.88-16.23	.625-.639	
AC204	16.26-16.64	.640-.655	
AC205	16.66-17.02	.656-.670	
AC206	17.04-17.42	.671-.686	
AC207	17.45-17.83	.687-.702	
AC208	17.85-18.21	.703-.717	
AC209	**18.24-19.62**	**.718-.733**	
AC210	**18.64-19.03**	**.734-.749**	
AC211	**19.05-19.41**	**.750-.764**	
AC212	**19.43-19.81**	**.765-.780**	

For use on AC1300, 2310M, 2310, 5310			
Collet #	Range (mm)	Range (in)	Length
AC301	18.24-18.62	.718-.733	1.25 in 31.75 mm
AC302	18.64-19.03	.734-.749	
AC303	19.05-19.41	.750-.764	
AC304	19.43-19.81	.765-.780	
AC305	20.24-20.22	.781-.796	
AC306	20.24-20.63	.797-.812	
AC307	20.65-21.01	.813-.827	
AC308	21.03-21.41	.828-.843	
AC309	21.44-21.79	.844-.858	
AC310	21.82-22.20	.859-.874	
AC311	**22.23-22.61**	**.875-.890**	
AC312	**22.63-22.99**	**.891-.905**	
AC313	**23.01-23.39**	**.906-.921**	
AC314	**23.41-23.77**	**.922-.936**	
AC315	**23.80-24.18**	**.937-.952**	
AC316	**24.21-24.56**	**.953-.967**	
AC317	**24.59-24.97**	**.968-.983**	
AC318	**25.00-25.38**	**.984-.999**	

For use on AC1400, 2410M, 2410, 5410			
Collet #	Range (mm)	Range (in)	Length
AC401	22.23-22.99	.875-.905	1.44 in 36.57 mm
AC402	23.01-23.77	.906-.936	
AC403	23.80-24.56	.937-.967	
AC404	24.59-25.38	.968-.999	
AC405	25.40-26.16	1.000-1.030	
AC406	26.19-26.95	1.031-1.061	
AC407	26.98-27.73	1.062-1.092	
AC408	27.76-28.55	1.093-1.124	
AC409	**28.57-29.34**	**1.125-1.155**	
AC410	**29.36-30.12**	**1.156-1.186**	
AC411	**30.15-30.91**	**1.187-1.217**	
AC412	**30.94-31.73**	**1.218-1.249**	

For use on AC1500, 2510M, 2510, 5510			
Collet #	Range (mm)	Range (in)	Length
AC501	28.58-29.34	1.125-1.155	1.62 in 41.14 mm
AC502	29.36-30.12	1.156-1.186	
AC503	30.15-30.91	1.187-1.217	
AC504	30.94-31.73	1.218-1.249	
AC505	31.75-32.51	1.250-1.280	
AC506	32.54-33.30	1.281-1.311	
AC507	33.33-34.09	1.312-1.342	
AC508	34.11-34.90	1.343-1.374	
AC509	34.93-35.69	1.375-1.405	
AC510	35.71-36.47	1.406-1.436	
AC511	36.50-37.26	1.437-1.467	
AC512	**37.29-38.08**	**1.468-1.499**	
AC513	**38.10-38.86**	**1.500-1.530**	
AC514	**38.89-39.65**	**1.531-1.561**	
AC515	**39.68-40.44**	**1.562-1.592**	
AC515	**40.46-41.25**	**1.593-1.624**	

For use on AC1600, 2610M, 2610, 5610			
Collet #	Range (mm)	Range (in)	Length
AC601	37.29-38.08	1.468-1.499	1.82 in 46.22 mm
AC602	38.10-38.86	1.500-1.530	
AC603	38.89-39.65	1.531-1.561	
AC604	39.68-40.44	1.562-1.592	
AC605	40.46-41.25	1.593-1.624	
AC606	41.28-42.04	1.625-1.655	
AC607	42.06-42.82	1.656-1.686	
AC608	42.85-43.61	1.687-1.717	
AC609	43.64-44.43	1.718-1.749	
AC610	44.45-45.21	1.750-1.780	
AC611	45.24-46.00	1.781-1.811	
AC612	46.03-46.78	1.812-1.842	
AC613	46.79-47.60	1.843-1.874	
AC614	47.63-48.39	1.875-1.905	
AC615	48.41-49.17	1.906-1.936	
AC616	**49.20-49.96**	**1.937-1.967**	
AC617	**49.98-50.77**	**1.968-1.999**	
AC618	**50.80-51.56**	**2.000-2.030**	
AC619	**51.59-52.35**	**2.031-2.061**	
AC620	**52.38-53.14**	**2.062-2.092**	

For use on AC1700, 2710M, 2710, 5710			
Collet #	Range (mm)	Range (in)	Length
AC701	49.20-49.96	1.937-1.967	2.00 in 50.80 mm
AC702	49.99-50.78	1.968-1.999	
AC703	50.80-51.56	2.000-2.030	
AC704	51.59-52.35	2.031-2.061	
AC705	52.38-53.14	2.062-2.092	
AC706	53.16-53.95	2.093-2.124	
AC707	53.98-54.74	2.125-2.155	
AC708	54.76-55.52	2.156-2.186	
AC709	55.55-56.31	2.187-2.217	
AC710	56.34-57.13	2.218-2.249	
AC711	57.15-57.91	2.250-2.280	
AC712	57.94-58.70	2.281-2.311	
AC713	58.73-59.49	2.312-2.342	
AC714	59.51-60.30	2.343-2.374	
AC715	60.33-61.09	2.375-2.405	
AC716	61.11-61.87	2.406-2.436	
AC717	61.90-62.66	2.437-2.467	
AC718	62.69-63.48	2.468-2.499	
AC719	63.50-64.26	2.500-2.530	
AC720	64.29-6.08	2.531-2.562	
AC721	**65.10-65.86**	**2.563-2.593**	
AC722	**65.89-66.65**	**2.594-2.624**	
AC723	**66.68-67.44**	**2.625-2.655**	
AC724	**67.46-68.22**	**2.656-2.686**	
AC725	**68.25-69.04**	**2.687-2.718**	
AC726	**69.06-69.83**	**2.719-2.749**	
AC727	**69.85-70.61**	**2.750-2.780**	
AC728	**70.64-71.40**	**2.781-2.811**	
AC729	**71.43-72.21**	**2.812-2.843**	

For use on AC1800, 2810M, 2810			
Collet #	Range (mm)	Range (in)	Length
AC801	65.08-65.86	2.562-2.593	2.25 in 57.15 mm
AC802	65.89-66.65	2.594-2.624	
AC803	66.68-67.44	2.625-2.655	
AC804	67.46-68.22	2.565-2.686	
AC805	68.25-69.04	2.687-2.718	
AC806	69.06-29.83	2.719-2.749	
AC807	69.85-70.61	2.750-2.780	
AC808	70.63-71.40	2.781-2.811	
AC809	71.43-72.21	2.812-2.843	
AC810	72.24-73.00	2.844-2.874	
AC811	73.03-73.79	2.875-2.905	
AC812	73.81-74.57	2.906-2.936	
AC813	74.60-75.39	2.937-2.968	
AC814	75.41-76.18	2.969-2.999	
AC815	76.20-76.96	3.000-3.030	
AC816	76.99-77.75	3.031-3.061	
AC817	77.78-78.56	3.062-3.093	
AC818	78.59-79.35	3.094-3.124	
AC819	79.38-80.14	3.125-3.155	
AC820	80.16-80.92	3.156-3.186	
AC821	80.95-81.74	3.187-3.218	

For use on AC1800, 2810M, 2810			
Collet #	Range (mm)	Range (in)	Length
AC822	**81.76-82.53**	**3.219-3.249**	2.25 in 57.15 mm
AC823	**82.55-83.31**	**3.250-3.280**	
AC824	**83.34-84.10**	**3.281-3.311**	
AC825	**84.13-84.91**	**3.312-3.343**	
AC826	**84.94-85.70**	**3.344-3.374**	
AC827	**85.73-86.49**	**3.375-3.405**	
AC828	**86.51-87.27**	**3.406-3.436**	
AC829	**87.30-88.09**	**3.437-3.468**	
AC830	**88.11-88.88**	**3.469-3.499**	
AC831	**88.90-89.66**	**3.500-3.530**	
AC832	**89.69-90.45**	**3.531-3.561**	
AC833	**90.48-91.26**	**3.562-3.593**	

For use on AC1900, 2910M, 2910			
Collet #	Range (mm)	Range (in)	Length
AC901	84.13-84.91	3.312-3.343	2.50 in 63.50 mm
AC902	84.94-85.70	3.344-3.374	
AC903	85.73-86.49	3.375-3.405	
AC904	86.51-87.27	3.406-3.436	
AC905	87.30-88.09	3.437-3.468	
AC906	88.11-88.88	3.469-3.499	
AC907	88.90-89.66	3.500-3.530	
AC908	89.69-90.45	3.531-3.561	
AC909	90.48-91.26	3.562-3.593	
AC910	91.29-92.05	3.594-3.624	
AC911	92.08-92.84	3.625-3.655	
AC912	92.86-93.62	3.656-3.686	
AC913	93.65-94.44	3.687-3.718	
AC914	94.46-95.23	3.719-3.749	
AC915	95.25-96.01	3.750-3.780	
AC916	96.04-96.80	3.781-3.811	
AC917	96.83-97.61	3.812-3.843	
AC918	97.64-98.40	3.844-3.874	
AC919	98.43-99.19	3.875-3.905	
AC920	99.21-99.97	3.906-3.936	
AC921	100.00-100.79	3.937-3.968	
AC922	100.81-101.58	3.969-3.999	
AC923	101.60-102.36	4.000-4.030	
AC924	102.39-103.15	4.031-4.061	
AC925	103.18-103.96	4.062-4.093	
AC926	103.99-104.75	4.094-4.124	
AC927	104.78-105.54	4.125-4.155	
AC928	105.56-106.32	4.156-4.186	
AC929	**106.35-107.11**	**4.187-4.217**	
AC930	**107.14-107.93**	**4.218-4.249**	
AC931	**107.95-108.71**	**4.250-4.280**	
AC932	**108.74-109.50**	**4.281-4.311**	
AC933	**109.53-110.29**	**4.312-4.342**	
AC934	**110.31-111.10**	**4.343-4.374**	
AC935	**111.13-111.89**	**4.375-4.405**	
AC936	**111.91-112.67**	**4.406-4.436**	
AC937	**112.70-113.46**	**4.437-4.467**	

To Order Contact: Exact Tooling / www.exacttooling.com / sales@exacttooling.com / 888-988-8820

Tork-Lok Short Series Collets

FEATURES AND BENEFITS:

- Precision ground flats
- Collets interchangeable on all arbors within specified range
- Accuracy of arbor not affected by indexing of collet shaft
- High-grade steels, precisely heat treated
- Silicone sealing of collet slots for special jobs is available on request for additional charge
- Collets in oversize (overlap) ranges are available – **see bold ranges**

Oversize collets AC7110-7115; 7213-7220 and 7317-7328 should be used only in light turning or grinding operations.

For use on AC7100A, 8100M, 8100, 12100			
Collet #	Range (mm)	Range (in)	Length
AC7101	12.70-12.95	.500-.510	.59 in 14.986 mm
AC7102	12.98-13.21	.511-.520	
AC7103	13.23-13.48	.521-.531	
AC7104	13.51-13.74	.532-.541	
AC7105	13.77-14.02	.542-.552	
AC7106	14.05-14.28	.553-.562	
AC7107	14.30-14.26	.563-.572	
AC7108	14.55-14.78	.573-.582	
AC7109	14.81-15.04	.583-.592	
AC7110	**15.06-15.32**	**.593-.603**	
AC7111	**15.34-15.57**	**.604-.613**	
AC7112	**15.60-15.85**	**.614-.624**	
AC7113	**15.88-16.10**	**.625-.634**	
AC7114	**16.13-16.38**	**.635-.645**	
AC7115	**16.41-16.64**	**.646-.655**	

For use on AC7200A, 8200M, 8200, 12200			
Collet #	Range (mm)	Range (in)	Length
AC7201	15.06-15.31	.593-.603	.72 in 18.29 mm
AC7202	15.34-15.57	.604-.613	
AC7203	15.60-15.85	.614-.624	
AC7204	15.88-16.10	.625-.634	
AC7205	16.13-16.38	.635-.645	
AC7206	16.41-16.64	.646-.655	
AC7207	16.66-16.92	.656-.666	
AC7208	16.94-17.17	.667-.676	
AC7209	17.20-17.45	.677-.687	
AC7210	17.48-17.70	.688-.697	
AC7211	17.73-17.96	.698-.707	
AC7212	17.98-18.21	.708-.717	
AC7213	**18.24-18.47**	**.718-.727**	
AC7214	**18.49-18.72**	**.728-.737**	
AC7215	**18.75-18.97**	**.738-.747**	
AC7216	**19.00-19.23**	**.748-.757**	
AC7217	**19.25-19.48**	**.758-.767**	
AC7218	**19.51-19.74**	**.768-.777**	
AC7219	**19.76-19.99**	**.778-.787**	
AC7220	**20.06-20.24**	**.788-.797**	

For use on AC7300A, 8300, 8300M, 12300			
Collet #	Range (mm)	Range (in)	Length
AC7301	18.24-18.47	.718-.727	.84 in 21.34 mm
AC7302	18.49-18.72	.728-.737	
AC7303	18.75-18.97	.738-.747	
AC7304	19.00-19.23	.748-.757	
AC7305	19.25-19.48	.758-.767	
AC7306	19.51-19.74	.768-.777	
AC7307	19.76-19.99	.778-.787	
AC7308	20.02-20.24	.788-.797	
AC7309	20.27-20.50	.798-.807	
AC7310	20.52-20.75	.808-.817	
AC7311	20.78-21.01	.818-.827	

For use on AC7300A, 8300, 8300M, 12300			
Collet #	Range (mm)	Range (in)	Length
AC7312	21.03-21.26	.828-.837	.84 in 21.34 mm
AC7313	21.29-21.51	.838-.847	
AC7314	21.54-21.74	.848-.856	
AC7315	21.77-22.00	.857-.866	
AC7316	22.02-22.12	.867-.874	
AC7317	**22.23-22.25**	**.875-.884**	
AC7318	**22.48-22.73**	**.885-.895**	
AC7319	**22.76-22.99**	**.896-.905**	
AC7320	**23.01-23.27**	**.906-.916**	
AC7321	**23.29-23.52**	**.917-.926**	
AC7322	**23.55-23.80**	**.927-.937**	
AC7323	**23.83-24.05**	**.938-.947**	
AC7324	**24.08-24.33**	**.948-.958**	
AC7325	**24.36-24.59**	**.959-.968**	
AC7326	**24.61-24.87**	**.969-.979**	
AC7327	**24.89-25.12**	**.980-.989**	
AC7328	**25.15-25.40**	**.990-1.000**	

For use on AC7400A, 8400, 8400M, 12400			
Collet #	Range (mm)	Range (in)	Length
AC7401	22.26-22.59	.875-.895	.94 in 23.88 mm
AC7402	22.76-23.27	.896-.916	
AC7403	23.29-23.80	.917-.937	
AC7404	23.83-24.33	.938-.958	
AC7405	24.36-24.87	.959-.979	
AC7406	24.89-25.40	.980-1.000	
AC7407	25.43-25.93	1.001-1.021	
AC7408	25.96-26.47	1.022-1.042	
AC7409	26.49-27.00	1.043-1.063	
AC7410	27.02-27.53	1.064-1.084	
AC7411	27.56-28.04	1.105-1.124	
AC7413	**28.58-29.11**	**1.125-1.146**	
AC7414	**29.13-29.67**	**1.147-1.168**	
AC7415	**29.69-30.27**	**1.169-1.190**	
AC7416	**30.25-30.79**	**1.191-1.212**	
AC7417	**30.81-31.34**	**1.213-1.234**	
AC7418	**31.37-31.90**	**1.235-1.256**	
AC7419	**31.93-32.46**	**1.257-1.278**	
AC7420	**32.49-33.00**	**1.279-1.299**	

For use on AC7500A, 8500, 8500M, 12500			
Collet #	Range (mm)	Range (in)	Length
AC7501	28.58-29.11	1.125-1.146	1.125 in 28.58 mm
AC7502	29.13-29.67	1.147-1.168	
AC7503	29.69-30.23	1.169-1.190	
AC7504	30.25-30.79	1.191-1.212	
AC7505	30.81-31.34	1.213-1.234	
AC7506	31.37-31.90	1.235-1.256	
AC7507	31.93-32.46	1.257-1.278	
AC7508	32.49-33.00	1.279-1.299	
AC7509	33.02-33.53	1.300-1.320	
AC7510	33.55-34.06	1.321-1.341	
AC7511	34.09-34.60	1.342-1.362	
AC7512	34.62-35.13	1.363-1.383	
AC7513	35.15-35.66	1.384-1.404	
AC7514	35.69-36.20	1.405-1.425	
AC7515	36.22-36.73	1.426-1.446	
AC7516	36.75-37.26	1.447-1.467	
AC7517	**37.29-37.82**	**1.468-1.489**	
AC7518	**37.85-38.38**	**1.490-1.511**	
AC7519	**38.41-38.94**	**1.512-1.533**	
AC7520	**38.96-39.50**	**1.534-1.555**	
AC7521	**39.52-40.06**	**1.556-1.577**	
AC7522	**40.08-40.62**	**1.578-1.599**	
AC7523	**40.64-117.37**	**1.600-1.621**	
AC7524	**41.20-41.71**	**1.622-1.642**	

For use on AC7600A, 8600, 8600M, 12600			
Collet #	Range (mm)	Range (in)	Length
AC7601	37.29-37.82	1.468-1.489	1.22 in 30.99 mm
AC7602	37.85-38.38	1.490-1.511	
AC7603	38.41-38.94	1.512-1.533	
AC7604	38.96-39.50	1.534-1.555	
AC7605	39.52-40.06	1.556-1.577	
AC7606	40.08-40.61	1.578-1.599	
AC7607	40.64-41.17	1.600-1.621	
AC7608	41.20-41.71	1.622-1.642	
AC7609	41.73-42.24	1.643-1.663	
AC7610	42.27-42.77	1.664-1.684	
AC7611	42.80-43.31	1.685-1.705	
AC7612	43.33-43.84	1.706-1.726	
AC7613	43.87-44.37	1.727-1.747	
AC7614	44.40-44.91	1.748-1.768	
AC7615	44.93-45.44	1.769-1.789	
AC7616	45.47-45.97	1.790-1.810	
AC7617	46.00-46.51	1.811-1.831	
AC7618	46.53-47.04	1.832-1.852	
AC7619	47.07-47.57	1.853-1.873	
AC7620	47.60-48.11	1.874-1.894	
AC7621	48.13-48.64	1.895-1.915	
AC7622	48.67-49.17	1.916-1.936	

For use on AC7600A, 8600, 8600M, 12600			
Collet #	Range (mm)	Range (in)	Length
AC7623	**49.20-49.71**	**1.937-1.957**	1.22 in 30.99 mm
AC7624	**49.73-50.24**	**1.958-1.978**	
AC7625	**50.27-50.78**	**1.979-1.999**	
AC7626	**50.80-51.31**	**2.000-2.020**	
AC7627	**51.33-51.84**	**2.021-2.041**	
AC7628	**51.87-52.38**	**2.042-2.062**	
AC7629	**52.40-52.91**	**2.063-2.083**	
AC7630	**52.93-53.44**	**2.084-2.104**	

For use on AC770A, 8700, 8700M, 12700			
Collet #	Range (mm)	Range (in)	Length
AC7701	49.20-49.71	1.937-1.957	1.31 in 33.27 mm
AC7702	49.73350.24	1.958-1.978	
AC7703	50.27-50.77	1.979-1.999	
AC7704	50.80-51.31	2.000-2.020	
AC7705	51.33-51.84	2.021-2.041	
AC7706	51.87-52.38	2.042-2.062	
AC7707	52.40-52.91	2.063-2.083	
AC7708	52.93-53.44	2.084-2.104	
AC7709	53.47-53.98	2.105-2.125	
AC7710	54.00-54.51	2.126-2.146	
AC7711	54.53-55.04	2.147-2.167	
AC7712	55.07-55.58	2.168-2.188	
AC7713	55.60-56.11	2.189-2.209	
AC7714	56.13-56.64	2.210-2.230	
AC7715	56.67-57.18	2.231-2.251	
AC7716	57.20-57.71	2.252-2.272	
AC7717	57.73-58.24	2.273-2.293	
AC7718	58.27-58.78	2.294-2.314	
AC7719	58.80-59.31	2.315-2.335	
AC7720	59.33-59.84	2.336-2.356	
AC7721	59.81-60.38	2.357-2.377	
AC7722	60.40-60.91	2.378-2.398	
AC7723	60.94-61.44	2.399-2.419	
AC7724	61.47-61.97	2.420-2.440	
AC7725	62.00-62.51	2.441-2.461	
AC7726	62.54-63.02	2.462-2.481	
AC7727	63.04-63.53	2.482-2.501	
AC7728	63.55-64.03	2.502-2.521	
AC7729	64.06-64.54	2.522-2.541	
AC7730	64.57-65.05	2.542-2.561	
AC7731	**65.08-65.61**	**2.562-2.583**	
AC7732	**65.63-66.14**	**2.584-2.604**	
AC7733	**66.17-66.68**	**2.605-2.625**	
AC7734	**66.70-67.21**	**2.626-2.646**	
AC7735	**67.23-67.74**	**2.647-2.667**	
AC7736	**67.77-68.30**	**2.668-2.689**	
AC7737	**68.33-68.86**	**2.690-2.711**	
AC7738	**68.89-69.42**	**2.712-2.733**	
AC7739	**69.44-69.98**	**2.734-2.755**	
AC7740	**70.00-70.54**	**2.756-2.777**	
AC7741	**70.56-71.10**	**2.778-2.799**	
AC7742	**71.12-71.65**	**2.800-2.821**	

Tork-Lok Replacement Components

Sold in Kits

EXPANDER

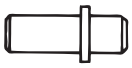

CONNECTOR

RETAINING RING

LOCK PIN

DIRT SEAL

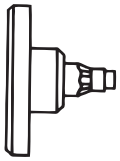

FLANGE SHAFT
(sold separately)

REPLACEMENT COMPONENTS		
Assembly #	Replacement #	Flange Shaft # (sold separately)
AC 2110	AC 2110K	AC 159
AC 2210	AC 2210K	AC 259
AC 2310	AC 2310K	AC 359
AC 2410	AC 2410K	AC 459
AC 2510	AC 2510K	AC 559
AC 2610	AC 2610K	AC 659
AC 2710	AC 2710K	AC 759
AC 2810	AC 2810K	AC 859
AC 2910	AC 2910K	AC 959
AC 8100	AC 8100K	AC 8152
AC 8200	AC 8200K	AC 8252
AC 8300	AC 8300K	AC 8352
AC 8400	AC 8400K	AC 8452
AC 8500	AC 8500K	AC 8552
AC 8600	AC 8600K	AC 8652
AC 8700	AC 8700K	AC 8752

Air-Operated Models

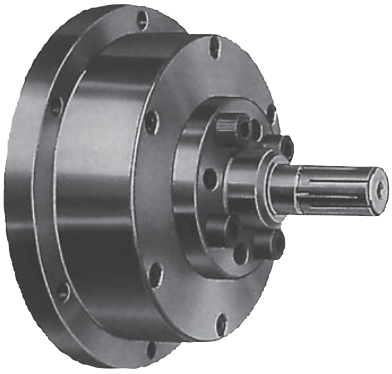

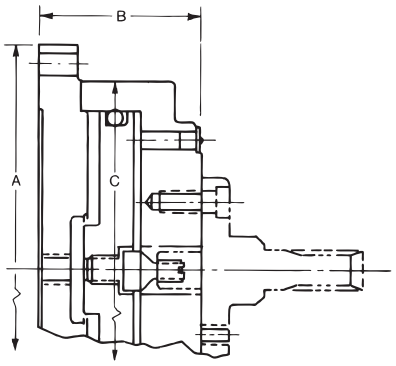

Measurements in inches.

AIR OPERATED MODELS					
Cylinder Assembly #	A	B	C	Connector Part #	For Use With
AC-3007	8.18	2.91	6.885 / 6.875	AC-135	AC 2110, 2210, 2310, 8100, 8300
				AC-136	AC 2410, 2510, 8400, 8500
AC-3010	11.18	3.03	9.885 / 9.875	AC-137	2110, 2210, 2310, 8100, 8200, 8300
				AC-138	2410, 2510, 8400, 8500
				AC-139	2610, 2710, 8600, 8700
AC-3013	14.18	3.09	12.885 / 12.875	AC-138	2410, 2510, 8400, 8500
				AC-139	2610, 2710, 2810, 2910, 8600, 8700

Manual Tork-Lok Fixtures

TORK-LOK FIXTURE
The Tork-Lok Fixture is a powerful locking mechanism for use with Tork-Lok Arbors. It features low initial cost and little maintenance for milling and drilling operations.

BASE ASSEMBLY			
Assembly #	A	B	C
AC 6100	3.75	6.38	0.56
AC 6400	4.50	6.88	0.56
AC 6600	5.25	7.75	0.56

LONG SERIES			
Assembly #	O.H.	Arbor Assembly	"C" Connector
AC 5110	4.30	AC 2110	AC 172 A
AC 5210	4.50	AC 2210	AC 172 A
AC 5310	4.77	AC 2310	AC 174 A
AC 5410	5.39	AC 2410	AC 472 A
AC 5510	5.70	AC 2510	AC 473 A
AC 5610	5.95	AC 2610	AC 672 A
AC 5710	6.27	AC 2710	AC 672 A

SHORT SERIES			
Assembly #	O.H.	Arbor Assembly	"D" Connector
AC 12100	3.62	AC 8100	AC 12272
AC 12200	3.78	AC 8200	AC 12272
AC 12300	3.96	AC 8300	AC 12372
AC 12400	4.16	AC 8400	AC 12472
AC 12500	4.4	AC 8500	AC 12572
AC 12600	4.74	AC 8600	AC 12672
AC 12700	4.79	AC 8700	AC 12672

Installation and Operating Instructions

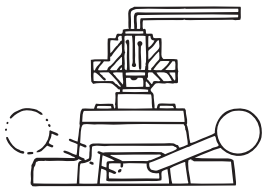

Locked Position Unlocked Position

OPERATING INSTRUCTIONS

1. Mount fixture on machine.
2. Adjust expander with Allen wrench so that part is a slip fit on collet. Be sure collet and arbor flats mate on both ends.
3. To clamp part, move handle clockwise.
4. To release part, move handle counterclockwise.

ORDERING INSTRUCTIONS

A complete fixture is ready to mount on your machine. When ordering additional arbor assemblies for fixture use, indicate connector also. When ordering base assemblies, indicate connector(s) desired.

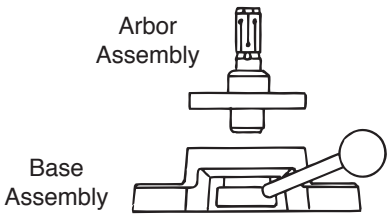

TO CHANGE ARBOR ASSEMBLIES

From one size range to another (see chart above for arbor assembly and connector):

1. Remove cap screws and turn arbor assembly off the base clockwise.
2. CAUTION Handle must be in unlocked position.
3. Turn replacement arbor assembly counterclockwise into base until snug. Continue movement until holes line up. Replace cap screws.

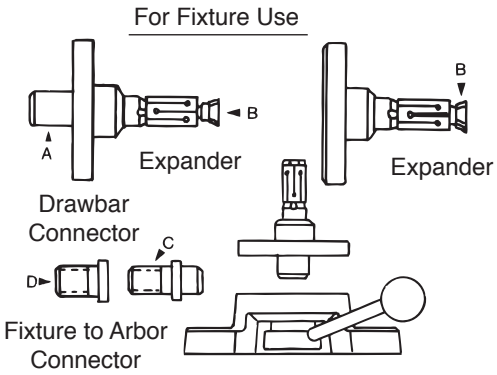

ADAPTATION OF DRAWBAR MODELS

1. Procure proper fixture base and connectors to accommodate drawbar model you have (see chart above).
2. Remove drawbar connector (A) by backing out expander (B) with Allen wrench until connector is free. Remove retaining ring.
3. Insert fixture connector (C or D) by turning in expander (B) until flats mate and are firm on both ends. No retainer ring is necessary.
4. CAUTION Handle must be in unlocked position.
5. Turn assembly counterclockwise into base assembly until snug. Continue movement until holes line up. Replace cap screws.

Forkardt North America
2155 Traversefield Dr.
Traverse City, MI 49686
Office: 800-544-3823
Fax: 231-995-8361
Email: sales@forkardt.us

Forkardt Deutschland GMBH
Heinrich-Hertz-Str. 7
D-40699 Erkrath
Office: 49-211-25 06-0
Fax: 49-211-25 06-221
Email: info@forkardt.com

Forkardt Schweiz AG
Industriestrasse 3
CH-3307 Effretikon
Office: 41-52-3 55 31 31
Fax: 41-52-3 43 52 40
Email: info-ch@forkardt.com

Forkardt France S.A.R.L.
28 Avenue de Bobigny
F-93135 Noisy le Sec Cedex
Office: 33-1-4183 12 40
Fax: 33-1-4840 47 59
Email: forkardt.france@forkardt.com

Forkardt China
1F, Bldg 2#, 458 Fute Rd. (N.),
Shanghai Waigaoqiao F.T.Z. 200131 PRC
Office: 86-021-58682809-110
Cell: 86-150003027888
Email: kdong@forkardt.us

Forkardt India Ltd.
3rd Floor, Merchant Towers, 5
Road No. 4, Banjara Hills Hyderbad—500034
Office: 91-40 23353781
Fax: 91-40 23353791
Email: info@forkardt.us